THIS DRAWING IS UNPUBLISHED. RELEASED FOR PUBLICATION –,– .
© COPYRIGHT – By – ALL RIGHTS RESERVED.

LOC	DIST
G	14

REVISIONS

P	LTR	DESCRIPTION	DATE	DWN	APVD
	G2	REVISED PER ECO–13–014663	17SEP2013	KH	DR

AMP WIRE RANGE	E13288	LR7189 Certified
22–16 AWG SOLID OR STRANDED	22–16 AWG SOLID OR STRANDED	22–16 AWG SOLID OR STRANDED

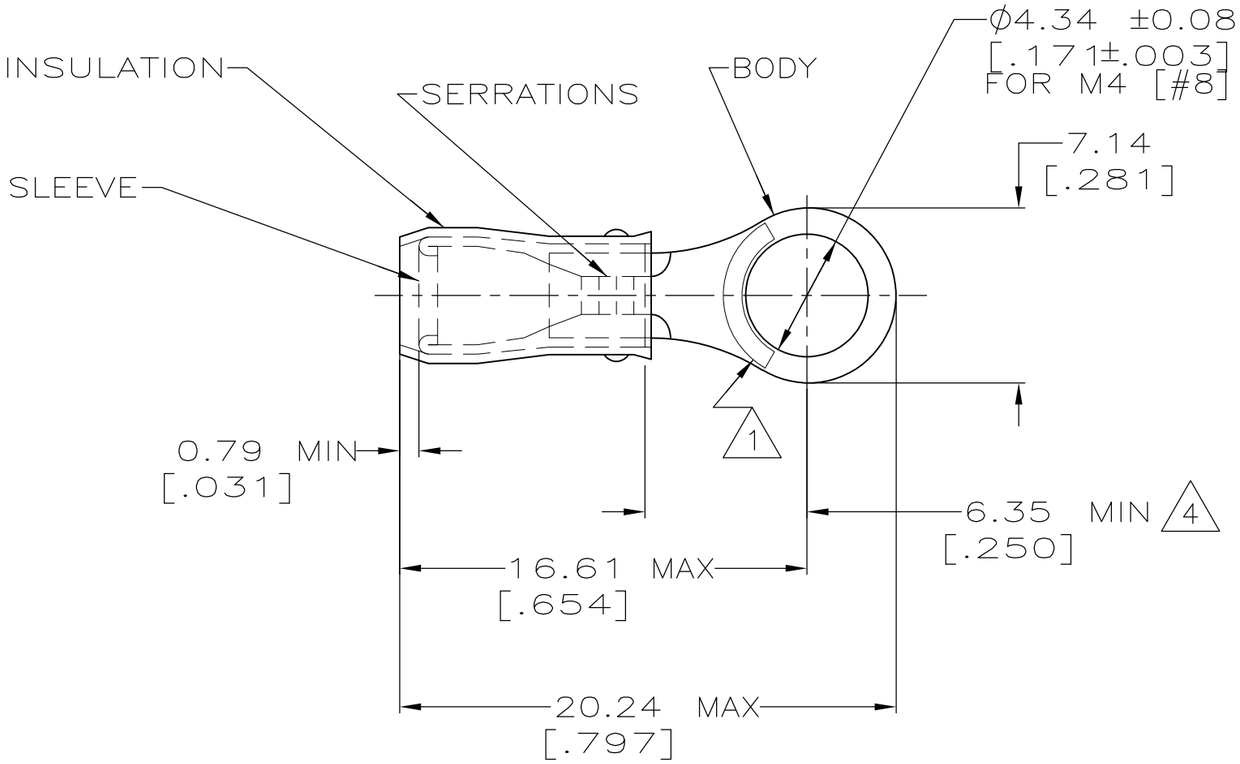

1 STAMP AMP 22–18* APPROX AS SHOWN 22–16 TERMINALS ARE STAMPED 22–18 IN ACCORDANCE WITH MILITARY SPEC SAE AS7928 COMMERCIAL WIRE RANGE IS 22–16

2 WIRE INSUL DIA, 2.03–3.18 [.080–.125]

3 TONGUE MATERIAL THK, 0.79±0.05 [.031±.002]

4 APPLIES FROM EDGE OF METAL WIRE BARREL TO CENTER OF STUD HOLE.

QTY	PACKAGE TYPE	PART NO
100	LOOSE PIECE,BOX	8–320554–1
5000	ON TAPE, REEL	2–320554–1
1000	LOOSE PIECE	320554

AMP INCORPORATED
CUSTOMER SERVICE SYSTEM

FOR ADDITIONAL PRODUCT INFORMATION OR COPIES OF DRAWINGS AND TECHNICAL DOCUMENTS	PRODUCT INFORMATION CENTER 1–800–522–6752
FOR APPLICATION TOOLING INFORMATION	TOOLING ASSISTANCE CENTER 1–800–722–1111
FOR ORDER ENTRY	1–800–526–5142

MAX RECOMMENDED OPERATING TEMPERATURE: 105°C [221°F]

VOLTAGE RATING: 300 V MAX –

CIRCULAR MIL AREA: 0.26mm² – 1.65mm² [509–3260]

–

THIS DRAWING IS A CONTROLLED DOCUMENT.

DIMENSIONS: mm[IN]

TOLERANCES UNLESS OTHERWISE SPECIFIED:
0 PLC ± –
1 PLC ± –
2 PLC ± 0.20[.008]
3 PLC ± –
4 PLC ± –
ANGLES ± –

MATERIAL: BODY,SLV: COPPER PER ASTM B152 INSUL: NYLON,COLOR,RED

FINISH: BODY & SLV,TIN PLATE PER ASTM B545

DWN	M ELLIS	26APR95
CHK	C PRESNELL	26APR95
APVD	N BIRCH	26APR95
PRODUCT SPEC	UL 486A	
APPLICATION SPEC	–	
WEIGHT	–	

TE Connectivity

NAME: TERMINAL, RING TONGUE, PIDG™
WIRE SIZE,22–16 AWG

SIZE	CAGE CODE	DRAWING NO	RESTRICTED TO
A3	00779	C–320554	–

CUSTOMER DRAWING | SCALE 4:1 | SHEET 1 OF 1 | REV G2