CASE FINISH	CURRENT (AMPS)	WORKING VOLTAGE				MAXIMUM DC RESISTANCE (OHMS)	MAXIMUM VOLTAGE DROP		MINIMUM CAPACITANCE (uF)	MIN. INSERTION LOSS PER MIL-STD-220, FULL LOAD, +25°C												
		-55°C TO +85°C		-55°C TO +125°C																		
		AC	DC	AC	DC		DC	AC		14 KHz	30 KHz	50 KHz	75 KHz	100 KHz	150 KHz	300 KHz	500 KHz	1 MHz	10 MHz	100 MHz	1 GHz	10 GHz
SOLDER	3	---	---	125(400Hz)	200	0.05	0.15	---	0.3	--	--	--	--	--	--	19	--	59	80	80	80	--

PART MARKING:

JAN M28861/05-021TB
OLSP2 DATE CODE
200VDC 125VAC 400Hz 3A
51-311-380

PACKAGE MARKING:

STANDARD

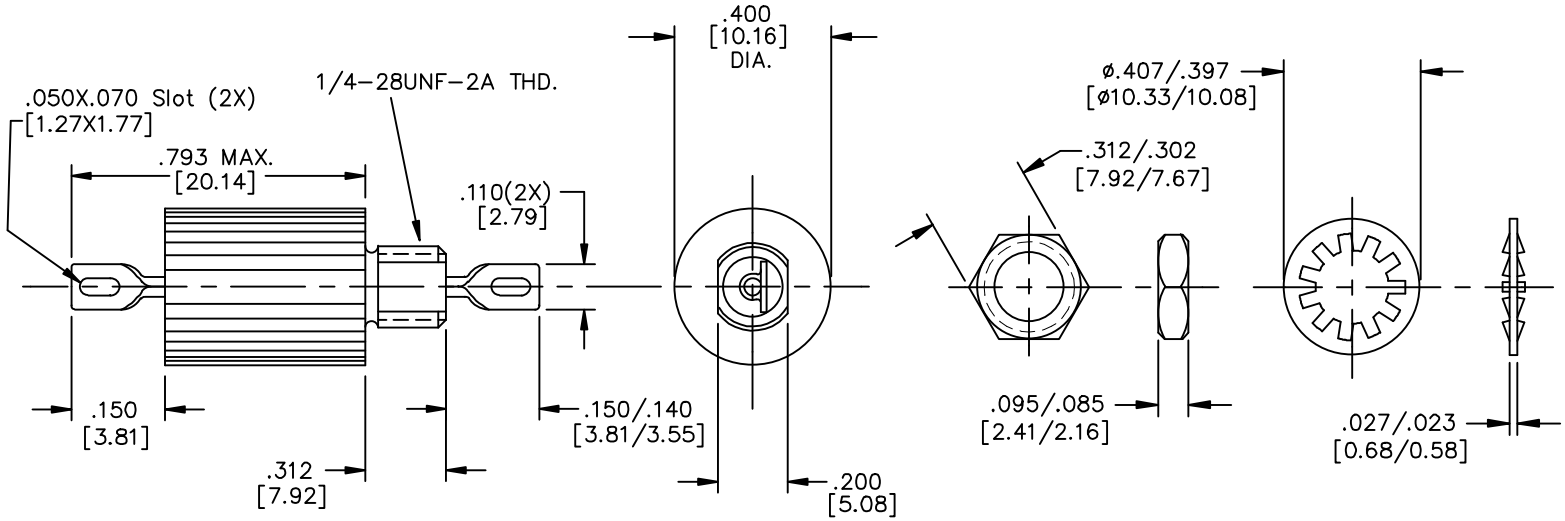

MTG. HARDWARE

MARKING NOTES:

N/A

SCHEMATIC

NOTES:

1) MOUNTING TORQUE NOT TO EXCEED 7in-lbs.
2) THIS PART CODED "NCA". SCI DOES NOT HAVE CHANGE AUTHORITY. CUSTOMER APPROVAL REQUIRED BEFORE PRODUCT/PROCESS CHANGES CAN BE MADE. (47)

REV. NO.	CHANGE NOTICE
46	CN. 191469
47	CN 57813-ENG

UNLESS OTHERWISE SPECIFIED DIMENSIONS ARE IN INCHES. [MILLIMETERS]

DO NOT SCALE.

TOLERANCES UNLESS OTHERWISE SPECIFIED
Fractions ±
Dec. .xx±
Dec. .xxx± .010
Angles ±0° 30'

CODE IDENT. NO. OLSP2

SPECTRUM CONTROL INC.

ERIE, FAIRVIEW PENNSYLVANIA

Dwn. KAUFFMAN
Ckd. 8-12-97
Sheet 1 of 1

Description Low Pass EMI Filter

51-311-380

Quality Products From The Specialists In Electro-Magnetic Compatibility