THIS DRAWING IS UNPUBLISHED. RELEASED FOR PUBLICATION –,– .
© COPYRIGHT – BY TYCO ELECTRONICS CORPORATION. ALL RIGHTS RESERVED.

LOC	DIST
BD	39

REVISIONS

P	LTR	DESCRIPTION	DATE	DWN	APVD
	G	REV PER EC 0G3B–0317–03	24APR03	VF	GS

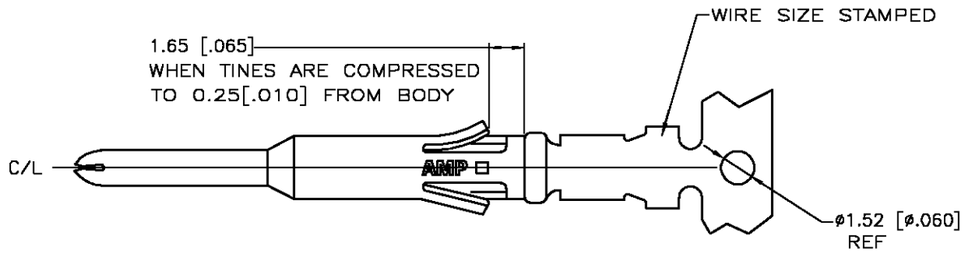

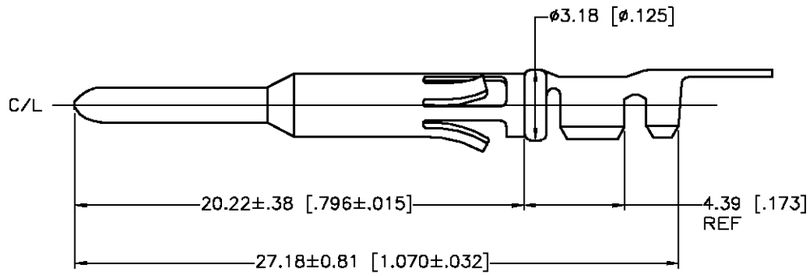

SECTION B–B

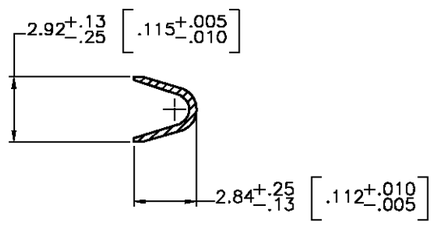

SECTION A–A

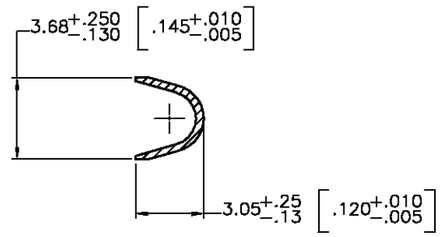

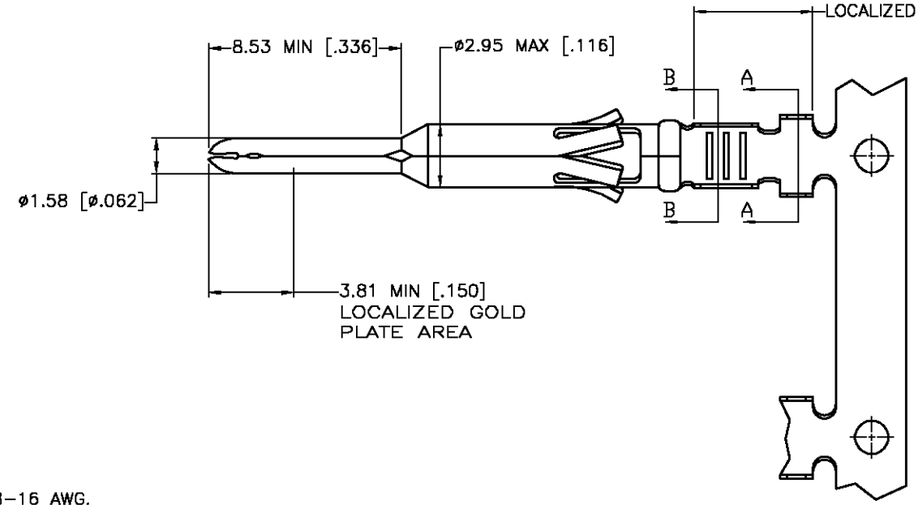

1. WIRE RANGE 18–16 AWG.
2. INSULATION RANGE 2.54–2.03[.100–.080] DIA.
3. FOR LOOSE PIECE PART SEE DWG 66589.
4. 0.76µm [.000030] MIN GOLD IN LOCALIZED GOLD PLATE AREA, 1.27µm [.000050] MIN TIN–LEAD IN LOCALIZED TIN–LEAD PLATE AREA, BOTH OVER 1.27µm [.000050] MIN NICKEL.
5. TIN PLATED.
6. 2.54µm [.000100] MIN SILVER OVER 1.27µm [.000050] MIN NICKEL.
7. GOLD PLATING PER MIL–G–45204, SILVER PER QQ–S–365, TIN PER MIL–T–10727 AND NICKEL PER QQ–N–290.
8. 0.76µm [.000030] MIN GOLD IN LOCALIZED GOLD PLATE AREA, 1.27µm [.000050] MIN TIN IN LOCALIZED TIN PLATE AREA, BOTH OVER 1.27µm [.000050] MIN NICKEL.

REVERSE REELED FOR MINI–APPLICATOR	8	66579–7
–	6	66579–6
REVERSE REELED FOR MINI–APPLICATOR	4	66579–4
OBSOLETE –	4	66579–3
REVERSE REELED FOR MINI–APPLICATOR	5	66579–2
–	5	66579–1
DESCRIPTION	FINISH	

THIS DRAWING IS A CONTROLLED DOCUMENT.

DIMENSIONS: MM [INCHES]

TOLERANCES UNLESS OTHERWISE SPECIFIED:
0 PLC ± –
1 PLC ± –
2 PLC ± 0.13 [.005]
3 PLC ± –
4 PLC ± –
ANGLES ± –

MATERIAL: BRASS MIL–C–50

FINISH: SEE TABLE 7

DWN V. FURLER	14MAY2003
CHK G. STEINHAUER	16MAY03
APVD G. STEINHAUER	16MAY03
PRODUCT SPEC	—
APPLICATION SPEC	—
WEIGHT	–

Tyco Electronics Corporation
Harrisburg, PA 17105

NAME: CONTACT, PIN, STRIP, TYPE VI, MULTIMATE
–

SIZE	CAGE CODE	DRAWING NO	RESTRICTED TO
A3	00779	C–66579	–

CUSTOMER DRAWING

SCALE	SHEET	REV
8:5	1 OF 1	G

H:\