| REVISIONS | | | | |
|---|---|---|---|---|
| ZONE | REV | DESCRIPTION | DATE | APPROVED |
| | A | ECN 0540 | 17-MAY-05 | |

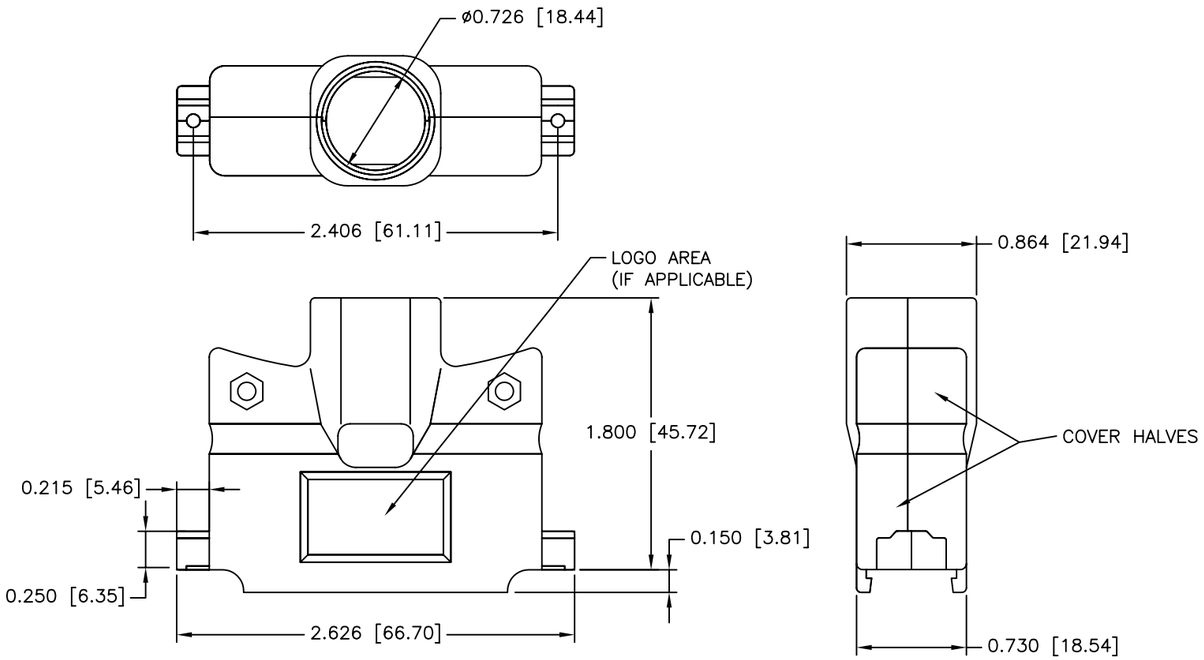


NO LOGO

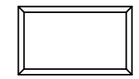

NORTECH LOGO

PART NUMBER INFORMATION

| PART# | LOGO STYLE | SUPPLIED |
|---|---|---|
| A29821503 | NO LOGO | BULK |
| C88000212 | NO LOGO | PACKAGED |
| A29921500 | NORTECH LOGO | BULK |
| C88000208 | NORTECH LOGO | PACKAGED |

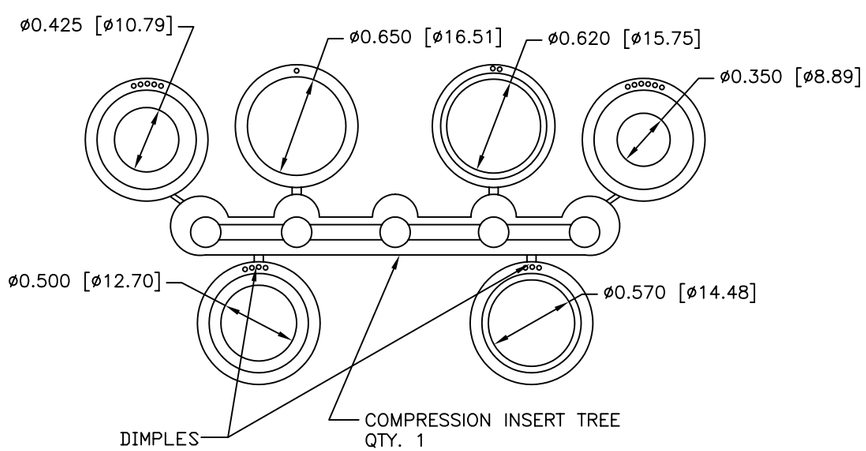


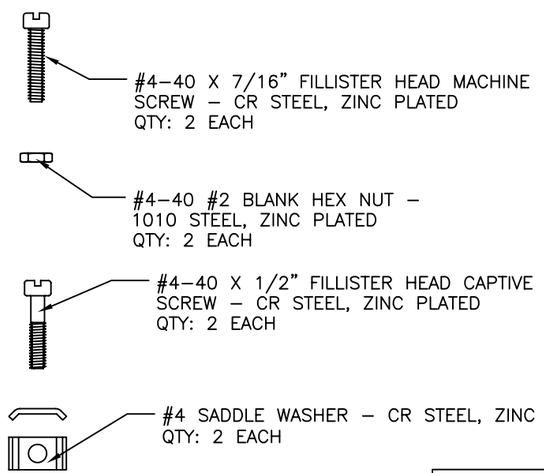


CONNECTOR COVER:

1. MATERIAL: ZINC ALLOY
2. FINISH: BRIGHT ZINC PLATING PER NTC SPECIFICATION N/T 000100
3. DIMENSIONS: INCHES [MM]
4. TOLERANCE: ±0.015 [0.381]

COMPRESSION INSERT TREE

1. MATERIAL: THERMOPLASTIC COMPOUND
2. COLOR: BLACK
3. DUROMETER: 80 ±3 TYPE A PER ASTM D2240
4. DIMENSIONS: INCHES [MM]
5. TOLERANCE: ±0.020 [0.508]

UNLESS OTHERWISE SPECIFIED

1. ALL DIMENSIONS ARE IN INCHES (MM)
2. DIMENSIONS ARE TYPICAL

| | |
|---|---|
| DRAWN Luis C. | 22-JAN-02 |
| CHECKED JSD | 12-FEB-02 |
| ISSUED | 12-FEB-02 |

**Northern Technologies**

THIS DRAWING IS THE PROPERTY OF NORTHERN TECHNOLOGIES AND SHOULD NOT BE REPRODUCED WITHOUT NORTHERN TECHNOLOGIES WRITTEN PERMISSION.

PART NUMBER SEE PART NUMBER INFORMATION

DESCRIPTION CM 50 METAL COVER

| SIZE | CODE | DWG NO. | REV |
|---|---|---|---|
| B | 100_105 | 0002-100-105 | |

SCALE 1:1 | SHEET 1 OF 1