THIS DRAWING IS UNPUBLISHED. RELEASED FOR PUBLICATION – –, .
© COPYRIGHT – By – ALL RIGHTS RESERVED.

LOC	DIST
FT	47

REVISIONS

P	LTR	DESCRIPTION	DATE	DWN	APVD
	G1	REVISED PER ECO-11-004587	11MAR11	RK	HMR

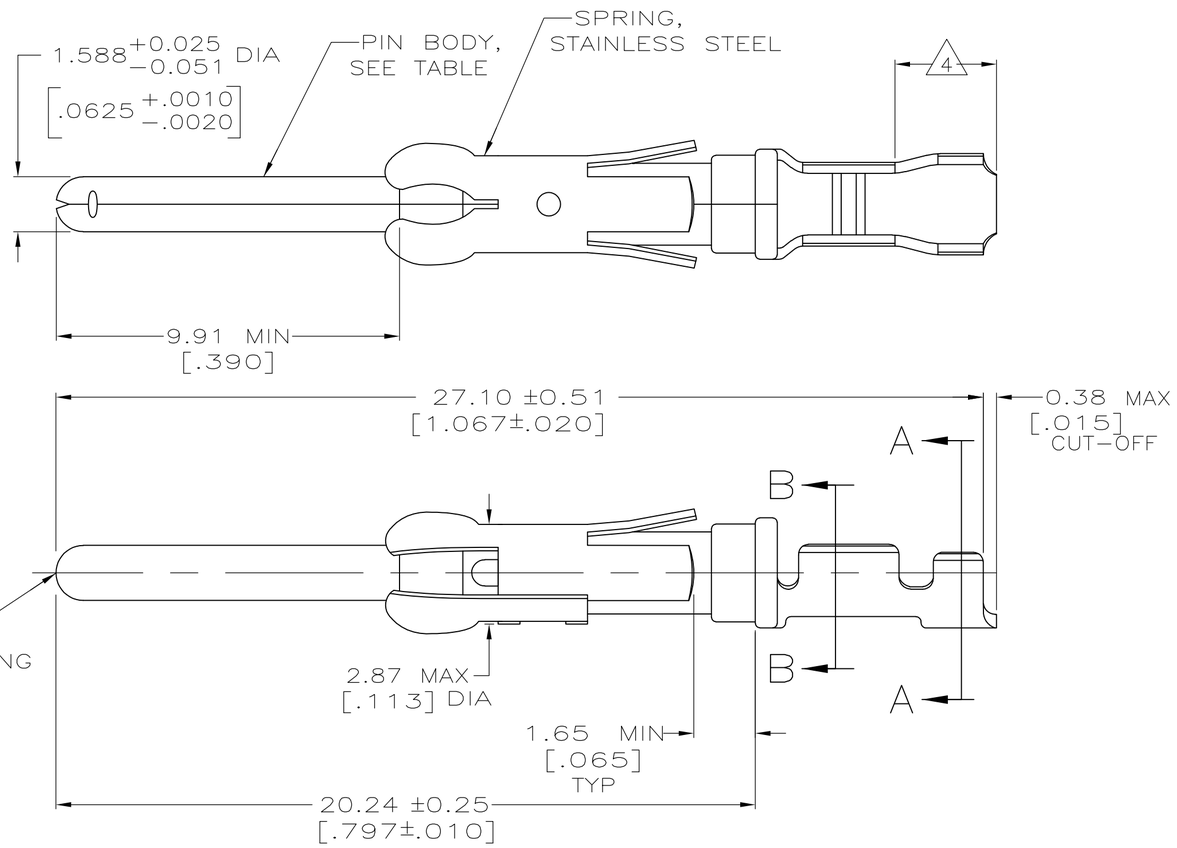

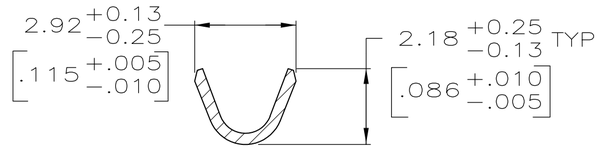

SECTION A–A

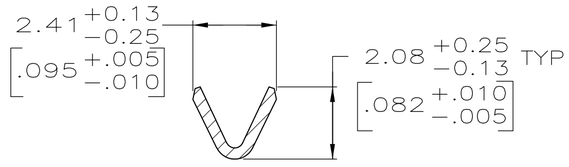

SECTION B–B

1. 0.76um [.000030] MIN PRECIOUS METAL PLATE ON MATING END FOR A LENGTH OF 5.08 [.200] MIN OVER 1.27um [.000050] MIN NICKEL PLATE. GOLD FLASH ALL OVER. CONFORMS TO THE REQUIREMENTS OF TYCO ELECTRONICS PRODUCT SPEC 108–10042, BASED ON EIA/ECA–364–1000.01 (CONTROLLED ENVIRONMENT APPLICATIONS),
2. 0.76um [.000030] MIN PRECIOUS METAL PLATE ON MATING END FOR A LENGTH OF 5.08 [.200] MIN WITH A UNIFORM GRADIENT TO 0.25um [.000010] MIN ON REMAINDER, OVER 1.27um [.000050] MIN NICKEL PLATE. GOLD FLASH ALL OVER. CONFORMS TO THE REQUIREMENTS OF TYCO ELECTRONICS PRODUCT SPEC 108–10042, BASED ON EIA/ECA–364–1000.01 (CONTROLLED ENVIRONMENT APPLICATIONS).
3. 0.38μm [.000015] MIN GOLD PER MIL–G–45204 ON MATING END FOR A LENGTH OF 5.08 [.200] MIN WITH GOLD FLASH ON THE REMAINDER OVER 1.27μm [.000050] MIN NICKEL PER QQ–N–290.
4. GOLD PLATING NOT REQUIRED IN THIS AREA.
5. 1.27μm [.000050] MIN GOLD PER MIL–G–45204 ON MATING END FOR A LENGTH OF 5.08 [.200] MIN WITH GOLD FLASH ON THE REMAINDER OVER 1.90μm [.000075] MIN NICKEL PER QQ–N–290.
6. 1.27 μm [.000050] MIN TIN–LEAD PER MIL–T–10727 OVER 1.27 μm [.000050] MIN NICKEL PER QQ–N–290.
7. WIRE RANGE 24–20 AWG.
8. INSULATION RANGE 1.02[.040]–2.03[.080] DIA.
9. 0.38 μm [.000015] MIN GOLD PER MIL–G–45204 ON MATING END FOR A LENGTH OF 5.08 [.200] MIN, 1.27μm [.000050] MIN TIN–LEAD PER MIL–T–10727 FOR A LENGTH OF 5.69 [.224] MIN ON OPPOSITE END, BOTH OVER 1.27μm [.000050] MIN NICKEL PER QQ–N–290 ON ENTIRE CONTACT.
10. 1.27μm [.000050] MIN TIN PER MIL–T–10727 OVER 1.27μm [.000050] MIN NICKEL PER QQ–N–290.

	PACKAGING TYPE	BODY FINISH	BODY MATERIAL	STRIP REEL P/N	PART NO
	SMALL PACK	10	BRASS	2–66102–5	1–66103–9
	STANDARD	10	BRASS	2–66102–5	1–66103–8
	SMALL PACK	1	BRASS	66102–4	1–66103–7
	SMALL PACK	3	BRASS	66102–3	1–66103–6
	SMALL PACK	6	BRASS	66102–2	1–66103–5
	SMALL PACK	2	BRASS	66102–1	1–66103–4
OBSOLETE	STANDARD	9	BRASS	2–66102–3	1–66103–3
OBSOLETE	STANDARD	1	PHOSPHOR BRONZE	2–66102–2	1–66103–2
OBSOLETE	STANDARD	6	PHOSPHOR BRONZE	2–66102–1	1–66103–1
	STANDARD	1	BRASS	66102–4	66103–4
	STANDARD	3	BRASS	66102–3	66103–3
	STANDARD	6	BRASS	66102–2	66103–2
	STANDARD	2	BRASS	66102–1	66103–1

THIS DRAWING IS A CONTROLLED DOCUMENT.

DIMENSIONS: MM [INCHES]

TOLERANCES UNLESS OTHERWISE SPECIFIED:
0 PLC ± –
1 PLC ± –
2 PLC ± 0.13 [.005]
3 PLC ± –
4 PLC ± –
ANGLES ± –

MATERIAL: SEE CALLOUTS
FINISH: SEE CALLOUTS

DWN	L.SIPE	06/01/92
CHK	W.LENKER	6–11–92
APVD	G.STEINHAUER	7–7–92
PRODUCT SPEC	—	
APPLICATION SPEC	—	
WEIGHT	—	

TE Connectivity

NAME: PIN ASSEMBLY, LOOSE PIECE, TYPE III+ –

SIZE	CAGE CODE	DRAWING NO	RESTRICTED TO
A2	00779	C-66103	—

CUSTOMER DRAWING | SCALE 8:1 | SHEET 1 OF 1 | REV G1

66103