THIS DRAWING IS UNPUBLISHED. RELEASED FOR PUBLICATION -,- .
© COPYRIGHT - By - ALL RIGHTS RESERVED.

LOC	DIST
FT	0

REVISIONS

P	LTR	DESCRIPTION	DATE	DWN	APVD
	V1	REVISED PER ECO-11-004587	11MAR11	RK	HMR

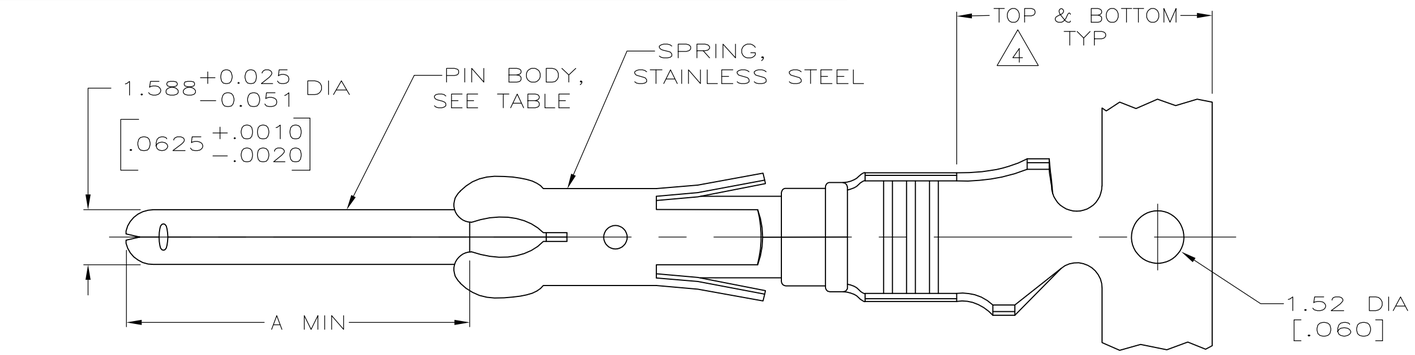

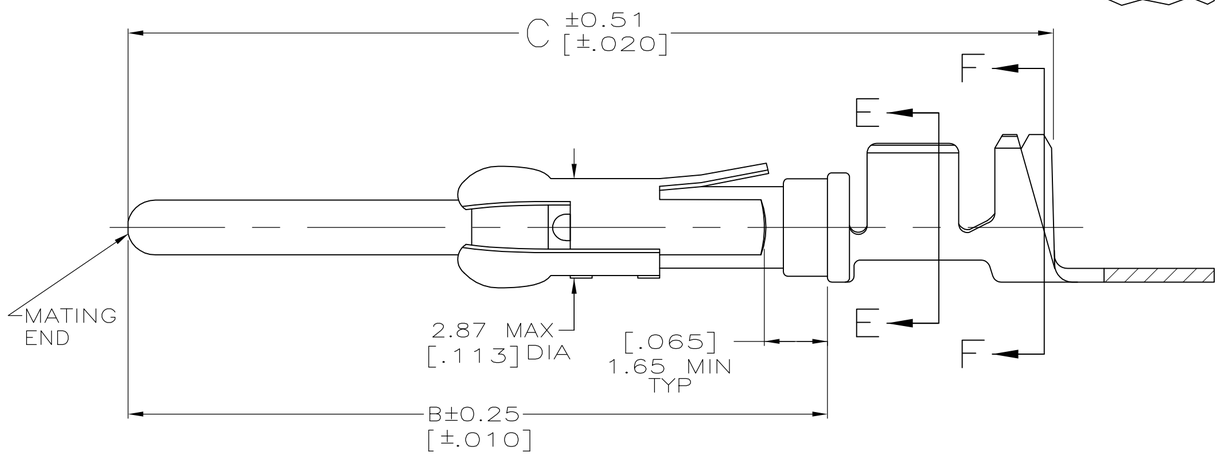

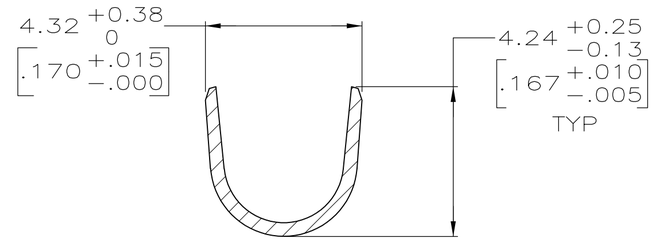

SECTION F−F

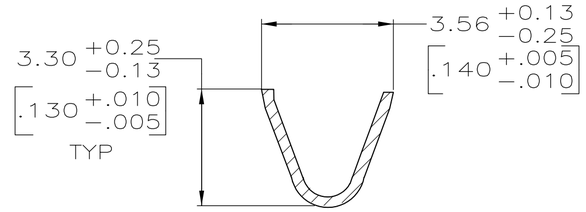

SECTION E−E

15 OBSOLETE PARTS: OBSOLETE CIS STREAMLINING PER D.RENAUD/D.SINISI

1 REELED FOR MINI-APPLICATOR.

2 0.76µm [.000030] MIN PRECIOUS METAL PLATE ON MATING END FOR A LENGTH OF 5.08 [.200] MIN OVER 1.27µm [.000050] MIN NICKEL PLATE. GOLD FLASH ALL OVER. CONFORMS TO THE REQUIREMENTS OF TE CONNECTIVITY PRODUCT SPEC 108-10042, BASED ON EIA/ECA-364-1000.01A (CONTROLLED ENVIRONMENT APPLICATIONS).

3 1.27µm [.000050] MIN TIN-LEAD PER MIL-T-10727 OVER 1.27µm [.000050] MIN NICKEL PER QQ-N-290.

4 GOLD PLATING NEED NOT APPEAR IN THIS AREA.

5 BRASS

6 PHOSPHOR BRONZE

7 WIRE RANGE 14-18 AWG.

8 INSULATION RANGE 2.79[.110]-3.81[.150] DIA.

9 0.38µm [.000015] MIN GOLD PER MIL-G-45204 ON MATING END FOR A LENGTH OF 5.08 [.200] MIN, 1.27 µm [.000050] MIN TIN-LEAD PER MIL-T-10727 FOR A LENGTH OF 5.69 [.224] MIN ON OPPOSITE END,BOTH OVER 1.27µm [.000050] MIN NICKEL PER QQ-N-290 ON ENTIRE CONTACT.

10 OBSOLETE PART NUMBER.

11 1.27µm [.000050] MIN TIN PER MIL-T-10727 OVER 1.27µm [.000050] MIN NICKEL PER Q-N-290.

12 COPPER NICKEL ALLOY.

13 0.38µm [.000015] MIN GOLD PER MIL-G-45204 ON MATING END FOR A LENGTH OF 5.08 [.200] MIN. WITH GOLD FLASH ON THE REMAINDER, OVER 1.27µm [.000050] MIN NICKEL PER QQ-N-290.

14 PRELIMINARY - NOT FOR PRODUCTION.

	C	B	A	REELING	PIN BODY FINISH	PIN BODY	LOOSE PIECE REF	PART NO
	26.75[1.053]	20.24[.797]	9.91[.390]	1	13	12	-	14 1-66597-2
	26.75[1.053]	20.24[.797]	9.91[.390]	1	11	12	1-66602-0	1-66597-1
	26.75[1.053]	20.24[.797]	9.91[.390]	1	2	12	66602-9	1-66597-0
15 OBSOLETE	26.75[1.053]	20.24[.797]	9.91[.390]	1	11	6	-	~~66597-9~~
	26.75[1.053]	20.24[.797]	9.91[.390]	1	11	5	66602-8	66597-8
OBSOLETE	26.75[1.053]	20.24[.797]	9.91[.390]	1	9	5	~~66602-5~~	~~66597-7~~
OBSOLETE	30.43[1.198]	23.93[.942]	13.59[.535]	1	3	5	-	~~66597-6~~
OBSOLETE	26.75[1.053]	20.24[.797]	9.91[.390]	1	2	6	~~66602-4~~	66597-5
OBSOLETE	26.75[1.053]	20.24[.797]	9.91[.390]	1	3	6	~~66602-3~~	66597-4
	26.75[1.053]	20.24[.797]	9.91[.390]	1	2	5	66602-2	66597-2
	26.75[1.053]	20.24[.797]	9.91[.390]	1	3	5	66602-1	66597-1

THIS DRAWING IS A CONTROLLED DOCUMENT.

DIMENSIONS: INCHES

TOLERANCES UNLESS OTHERWISE SPECIFIED:
0 PLC ± -
1 PLC ± -
2 PLC ± 0.13[.005]
3 PLC ± -
4 PLC ± -
ANGLES ± -

MATERIAL: SEE CALLOUTS
FINISH: SEE TABLE

DWN R.SHIREY 7-22-91
CHK R.STONE 8-15-91
APVD J.WESTMAN 8-19-91
PRODUCT SPEC -
APPLICATION SPEC -
WEIGHT -

TE Connectivity

NAME
-
PIN ASSEMBLY, .062, TYPE III+
-

SIZE	CAGE CODE	DRAWING NO	RESTRICTED TO
A2	00779	C-66597	-

CUSTOMER DRAWING | SCALE 8:1 | SHEET 1 OF 1 | REV V1

66597

1471-9 (3/11)