THIS DRAWING IS UNPUBLISHED. RELEASED FOR PUBLICATION -,- .
© COPYRIGHT - By - ALL RIGHTS RESERVED.

LOC	DIST
CM	00

REVISIONS

P	LTR	DESCRIPTION	DATE	DWN	APVD
	Y3	REVISED PER ECO-11-014117	11JUL11	HMR	SM

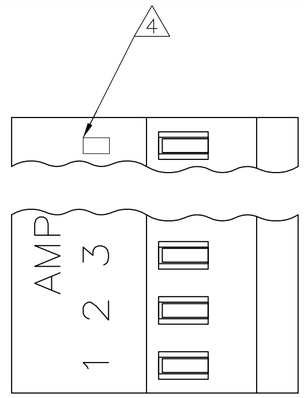

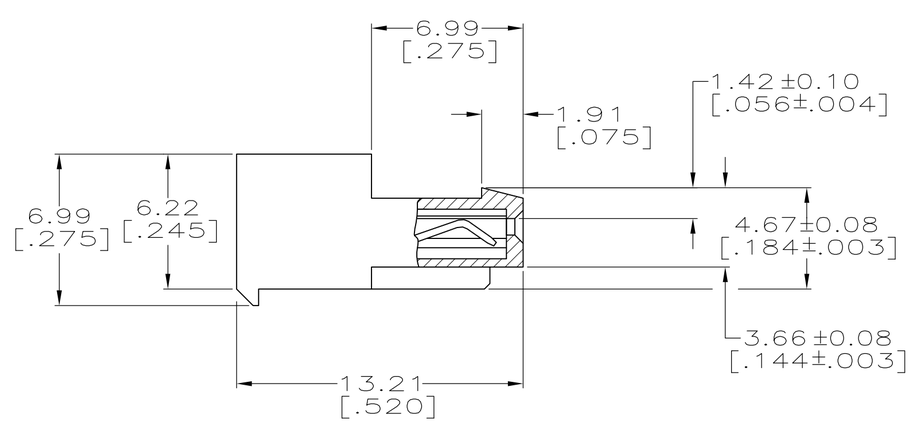

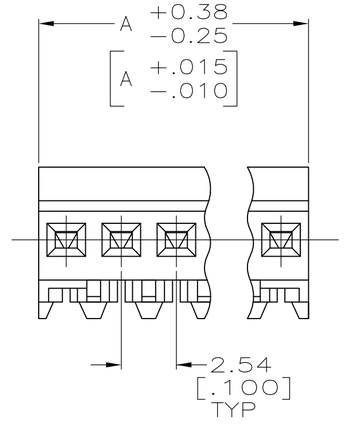

LEADFREE	DIM A	NO. OF CIRCUITS	PART NO.
YES	71.12[2.800]	28	5-640442-8
YES	68.58[2.700]	27	5-640442-7
YES	66.04[2.600]	26	5-640442-6
YES	63.50[2.500]	25	5-640442-5
YES	60.96[2.400]	24	5-640442-4
YES	58.42[2.300]	23	5-640442-3
YES	55.88[2.200]	22	5-640442-2
YES	53.34[2.100]	21	5-640442-1
YES	50.80[2.000]	20	5-640442-0
YES	48.26[1.900]	19	4-640442-9
YES	45.72[1.800]	18	4-640442-8
YES	43.18[1.700]	17	4-640442-7
YES	40.64[1.600]	16	4-640442-6
YES	38.10[1.500]	15	4-640442-5
YES	35.56[1.400]	14	4-640442-4
YES	33.02[1.300]	13	4-640442-3
YES	30.48[1.200]	12	4-640442-2
YES	27.94[1.100]	11	4-640442-1
YES	25.40[1.000]	10	4-640442-0
YES	22.86[.900]	9	3-640442-9
YES	20.32[.800]	8	3-640442-8
YES	17.78[.700]	7	3-640442-7
YES	15.24[.600]	6	3-640442-6
YES	12.70[.500]	5	3-640442-5
YES	10.16[.400]	4	3-640442-4
YES	7.62[.300]	3	3-640442-3
YES	5.08[.200]	2	3-640442-2
~~NO~~	~~71.12[2.800]~~	~~28~~	~~2-640442-8~~ SUPERCEDED BY 5-640442-8
~~NO~~	~~68.58[2.700]~~	~~27~~	~~2-640442-7~~ SUPERCEDED BY 5-640442-7
~~NO~~	~~66.04[2.600]~~	~~26~~	~~2-640442-6~~ SUPERCEDED BY 5-640442-6
~~NO~~	~~63.50[2.500]~~	~~25~~	~~2-640442-5~~ SUPERCEDED BY 5-640442-5
~~NO~~	~~60.96[2.400]~~	~~24~~	~~2-640442-4~~ SUPERCEDED BY 5-640442-4 △7
~~NO~~	~~58.42[2.300]~~	~~23~~	~~2-640442-3~~ SUPERCEDED BY 5-640442-3
~~NO~~	~~55.88[2.200]~~	~~22~~	~~2-640442-2~~ SUPERCEDED BY 5-640442-2
~~NO~~	~~53.34[2.100]~~	~~21~~	~~2-640442-1~~ SUPERCEDED BY 5-640442-1
~~NO~~	~~50.80[2.000]~~	~~20~~	~~2-640442-0~~ SUPERCEDED BY 5-640442-0
~~NO~~	~~48.26[1.900]~~	~~19~~	~~1-640442-9~~ SUPERCEDED BY 4-640442-9
NO	45.72[1.800]	18	~~1-640442-8~~ OBSOLETE
NO	43.18[1.700]	17	1-640442-7
NO	40.64[1.600]	16	1-640442-6
NO	38.10[1.500]	15	1-640442-5
NO	35.56[1.400]	14	1-640442-4
NO	33.02[1.300]	13	1-640442-3
NO	30.48[1.200]	12	1-640442-2
~~NO~~	~~27.94[1.100]~~	~~11~~	~~1-640442-1~~ SUPERCEDED BY 4-640442-1 △7
NO	25.40[1.000]	10	1-640442-0
NO	22.86[.900]	9	640442-9
NO	20.32[.800]	8	640442-8
NO	17.78[.700]	7	640442-7
NO	15.24[.600]	6	640442-6
NO	12.70[.500]	5	640442-5
NO	10.16[.400]	4	640442-4
NO	7.62[.300]	3	640442-3
NO	5.08[.200]	2	640442-2

△1 MATERIAL: CONNECTOR – NYLON UL94V-2 (BLUE).
CONTACTS – 0.30[.012] THICK COPPER ALLOY
BRIGHT TIN-LEAD .00203[.000080] MIN THICKNESS
FOR 640442-2 THRU 2-640442-8.
MATTE WHISKER MITIGATED TIN .00203[.000080] MIN THICKNESS
OVER NICKEL UNDERPLATE FOR 3-640442-2 THRU 5-640442-8.

2. CONTACTS ACCEPT 26 AWG WIRE WITH 1.52[.060] MAX INSULATION DIAMETER.

3. CONTACTS MUST ACCEPT 0.64±0.03[.025 POST AND REMAIN LOCKED IN POSITION.

△4 IDENTIFICATION NUMBER FOR LAST CIRCUIT MAY NOT APPEAR ON ALL ASSEMBLIES.

5. DIMENSIONS IN BRACKETS ARE IN INCHES.

6. HOUSING FEATURES ARE: CLOSED END WITH LOCKING RAMP.

△7 OBSOLETE PARTS: OBSOLETE CIS STREAMLINING PER D.RENAUD/D.SINISI

METRIC

THIS DRAWING IS A CONTROLLED DOCUMENT.

DIMENSIONS: mm [INCHES]

TOLERANCES UNLESS OTHERWISE SPECIFIED:
0 PLC ±
1 PLC ±
2 PLC ±
3 PLC ± 0.13 [.005]
4 PLC ±
ANGLES ±

MATERIAL △1
FINISH △1

DWN	S. CARPENTER	10JUN2003
CHK	D. BOSSI	10JUN2003
APVD	D. BOSSI	10JUN2003
PRODUCT SPEC	108-1050	
APPLICATION SPEC	114-1019	
WEIGHT		

TE Connectivity

NAME
MTA 100 CONNECTOR ASSEMBLY,
26 AWG, STANDARD

SIZE	CAGE CODE	DRAWING NO	RESTRICTED TO
A2	00779	C-640442	—

CUSTOMER DRAWING | SCALE 5:1 | SHEET 1 OF 1 | REV Y3

640442

1471-9 (3/11)