This document was generated on 01/07/2011

PLEASE CHECK WWW.MOLEX.COM FOR LATEST PART INFORMATION

Part Number: 0039293206
Status: Active
Overview: minifit_jr
Description: 4.20mm (.165") Pitch Mini-Fit Jr.™ Header, Dual Row, Vertical, without Snap-in Plastic Peg PCB Lock, 20 Circuits, PA Polyamide Nylon 6/6 94V-2, Tin (Sn) Plating, with Drain Holes

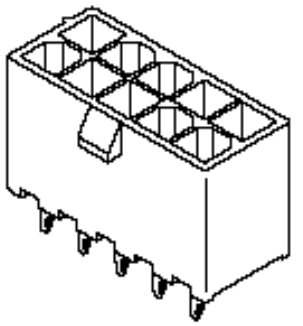

Series image - Reference only

Documents:

3D Model
Drawing (PDF)
Product Specification PS-5556-001 (PDF)
RoHS Certificate of Compliance (PDF)

Agency Certification

CSA	LR19980
TUV	R72081037
UL	E29179

General

Product Family	PCB Headers
Series	5566
Application	Power, Wire-to-Board
Comments	Current = 13A max. per circuit when header is mated to a receptacle loaded with 45750 Mini-Fit Plus HCS™ Crimp Terminal Crimpted to to 16 AWG wire. . See Molex product specification PS-45750-001 for additional current de-rating information.. High Temperature, Square Pin, Solder Type
Overview	minifit_jr
Product Name	Mini-Fit Jr.™

Physical

Breakaway	No
Circuits (Loaded)	20
Circuits (maximum)	20
Color - Resin	Natural
Durability (mating cycles max)	30
First Mate / Last Break	No
Flammability	94V-2
Glow-Wire Compliant	No
Guide to Mating Part	No
Keying to Mating Part	None
Lock to Mating Part	Yes
Material - Metal	Brass
Material - Plating Mating	Gold
Material - Plating Termination	Tin
Material - Resin	Nylon
Number of Rows	2
Orientation	Vertical
PC Tail Length	3.50mm (.138")
PCB Locator	Yes
PCB Retention	None
PCB Thickness - Recommended	1.60mm (.063")
Packaging Type	Bag
Pitch - Mating Interface	4.20mm (.165")
Pitch - Termination Interface	4.20mm (.165")
Plating min - Mating	0.762µm (30µ")
Plating min - Termination	2.540µm (100µ")

EU RoHS
ELV and RoHS Compliant
REACH SVHC
Contains SVHC: No
Low-Halogen Status
Not Reviewed

China RoHS

Need more information on product environmental compliance?

Email productcompliance@molex.com
For a multiple part number RoHS Certificate of Compliance, click here

Please visit the Contact Us section for any non-product compliance questions.

Search Parts in this Series
5566Series

Mates With
5557 Mini-Fit Jr.™ Receptacle Housing

Polarized to Mating Part	Yes
Polarized to PCB	Yes
Shrouded	Fully
Stackable	No
Surface Mount Compatible (SMC)	No
Temperature Range - Operating	-40°C to +105°C
Termination Interface: Style	Through Hole

Electrical

Current - Maximum per Contact	13A
Voltage - Maximum	600V

Material Info

Old Part Number	5566-20B

Reference - Drawing Numbers

Product Specification	PS-5556-001
Sales Drawing	SD-5566-002

This document was generated on 01/07/2011

PLEASE CHECK WWW.MOLEX.COM FOR LATEST PART INFORMATION