DRAWING MADE IN AMERICAN PROJECTION

© 1962 BY AMP INCORPORATED. ALL RIGHTS RESERVED. AMP PRODUCTS COVERED BY PATENTS AND/OR PATENTS PENDING.

REVISIONS

ZONE	LTR	DESCRIPTION	DATE	APPROVED
	J	REDRAWN & ADDED TAPE NO'S P-7000	3-2-73	[illegible]
	K	REVISED ECN P-7296 PM	8-5-74	RG
	L	REV PER G-1594 PMF	10/10/85	[illegible]
	M	OBS 2--4 PER G-0510	4/24/87	[illegible]
	N	OBS 2--1 PER G-2496	7/22/87	PMF
	P	OBS 2--3 PER G-2582	3/25/88	[illegible]

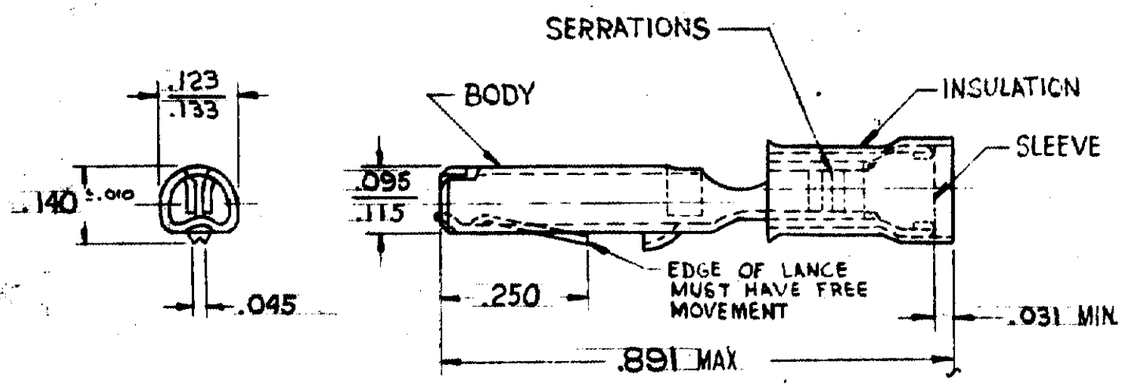

FOR .060 TO .090 WIRE INS. DIA.

TABLE I

PART NO ON TAPE	PART NO.	MATERIAL & FINISH
SEE TABLE II	SEE TABLE II	SLEEVE: COPPER (QQ-C-576) INSULATION: NYLON (MIL-M-20693) TYPE I COLOR: NATURAL BODY: BRASS (MIL-C-50) FINISH: SEE TABLE II

TABLE II

PART NO.	PART NO. ON TAPE	FINISH
329334	OBSOLETE ~~2-329334-3~~	GOLD PL (MIL-G-45204 B) .000020 MIN. EXT. THK. OVER NICKEL PL. (QQ-N-290) .000050 MIN. EXT. THK
~~329334-1~~ OBSOLETE	~~2-329334-4~~ OBSOLETE	~~TIN PL. (MIL-T-10727) .00015 TO .0004 THK. OVER NICKEL PL. (QQ-N-290) .000050 MIN. EXT. THK.~~

UNLESS OTHERWISE SPECIFIED DIMENSIONS ARE IN INCHES
TOLERANCES ON:
DECIMALS ± .008
ANGLES ± 5°

MATERIAL: SEE TABLE I

CONTRACT NO. 11
DR. Thomas Radoc 2-29-73
CHK [illegible] 3-2-73
APPD Abel 3-2-73
REL Ralph Goss 3-2-73
DSGN APPD
OTHER APPD

AMP INCORPORATED
HARRISBURG, PENNSYLVANIA

NAME: WIRE TERMINAL PIDG LANCELOK WIRE SIZE: 20-18

SIZE	CODE IDENT NO.	NUMBER
B	00779	329334

SCALE NTS | SHEET 1 OF 1

CUSTOMER DRAWING