F-213-1

samtec

SEARRAY™ OPEN PIN FIELD INTERCONNECTS

(1,27 mm) .050"

SEAF SERIES

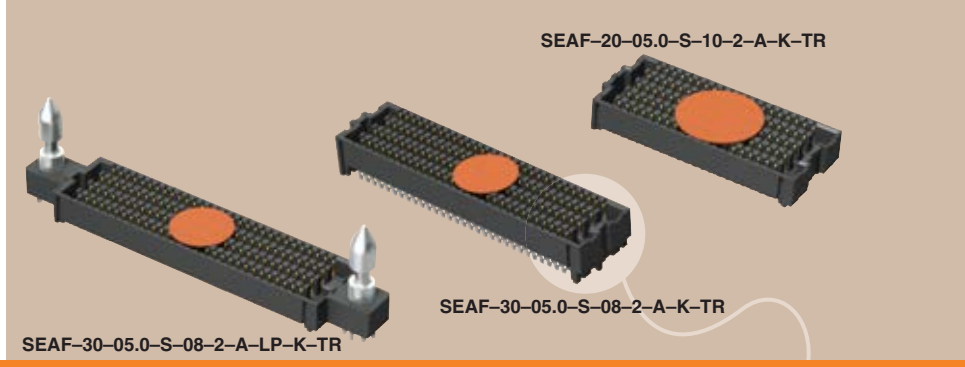

HIGH SPEED/HIGH DENSITY OPEN PIN FIELD

SPECIFICATIONS

For complete specifications and recommended PCB layouts see www.samtec.com?SEAF

Insulator Material: Black LCP
Contact Material: Copper Alloy
Solder Charge: 95.5% Sn, 3.8% Ag, 0.7% Cu (Tin/Lead also available. Call Samtec.)
Operating Temp Range: -55°C to +125°C
Plating: Au or Sn over 50µ" (1,27 µm) Ni
Contact Resistance: 5.5 mΩ
Working Voltage: 240 VAC
RoHS Compliant: Yes
Lead-Free Solderable: Yes

UL FILE NO. E111594

Mates with:
SEAM, SEAMP, SEAR, SEAMI, SEAC (Requires –LP)

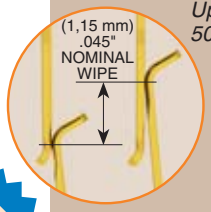

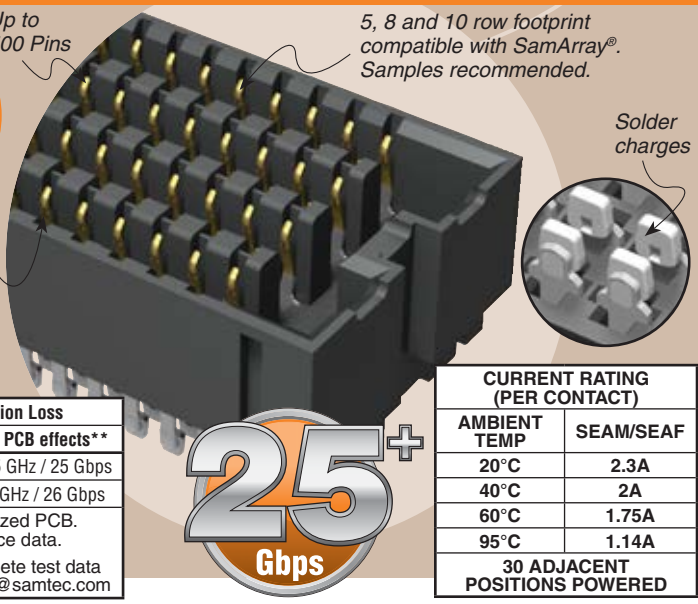

FinalInch® Break Out Region Performance Certified finalinch.com PATENT PENDING

25+ Gbps

SEAM/SEAF 7 mm Stack Height	Rated @ 3dB Insertion Loss	
	with PCB effects*	w/o PCB effects**
Single-Ended Signaling	9.5 GHz / 19 Gbps	12.5 GHz / 25 Gbps
Differential Pair Signaling	10.5 GHz / 21 Gbps	13 GHz / 26 Gbps

*Performance data includes effects of a non-optimized PCB.
**Test board losses de-embedded from performance data.

Performance data for other stack heights and complete test data available at www.samtec.com?SEAF or contact sig@samtec.com

CURRENT RATING (PER CONTACT)	
AMBIENT TEMP	SEAM/SEAF
20°C	2.3A
40°C	2A
60°C	1.75A
95°C	1.14A
30 ADJACENT POSITIONS POWERED	

Industry Standards
PISMO 2
VITA 47
VITA 57
Protocols Supported
100 GbE
Fibre Channel
Rapid I/O
PCI Express®
SATA
InfiniBand™
Download app notes at www.samtec.com/appnote
Contact SIG @ samtec.com for questions on protocols

SEAF – NO. PINS PER ROW – LEAD STYLE – PLATING OPTION – NO. OF ROWS – 2 – A – OPTION – K – TR

NO. PINS PER ROW: –10, –15, –20, –30, –40, –50
(–10 only available in 04 row)
(–15 only available in 10 row)

LEAD STYLE: Specify LEAD STYLE from chart

PLATING OPTION:
–L = 10µ" (0,25 µm) Gold on contact area, Matte Tin on solder tail
–S = 30µ" (0,76 µm) Gold on contact area, Matte Tin on solder tail

NO. OF ROWS:
–04 = Four Rows
–05 = Five Rows
–06 = Six Rows
–08 = Eight Rows
–10 = Ten Rows

2: **–2** = Lead-Free Solder Charge

A

OPTION:
–LP = Latch Post (–LP required for SEAC mate only) (Available with –05.0 lead style and –04, –05, –08 & –10 rows only)

K: **–K** = Polyimide film Pick & Place Pad) (Not available with –10 and –15 pins with –LP Latch post)

LEAD STYLE	A
–05.0	(5,05) .199
–06.0	(6,05) .238
–06.5	(6,55) .258

NO. OF ROWS	B
–04	(5,61) .221
–05, –06	(8,20) .323
–08	(10,69) .421
–10	(13,23) .521

E.L.P.™ EXTENDED LIFE PRODUCT
10 year Mixed Flowing Gas with 30µ" Gold
Call Samtec for maximum cycles mated with SEAM

DIFFERENTIAL

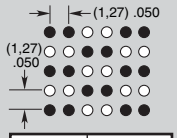

ARRAY	PAIR COUNT
50x10	125
50x8	100
40x10	100

ARRAY	PAIR COUNT
40x8	80
40x6	60
30x10	75
30x8	60
30x6	45
20x10	50
20x8	40
20x5	25

Note: Some sizes, styles and options are non-standard, non-returnable.

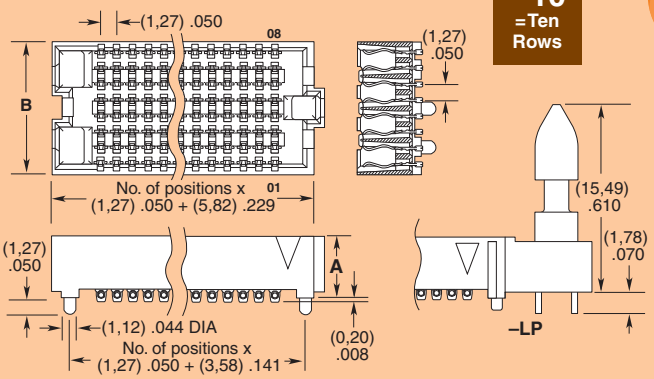

MATED HEIGHTS			
SEAM LEAD STYLE	SEAF LEAD STYLE		
	–05.0	–06.0	–06.5
–02.0	7 mm	8 mm	8.5 mm
–03.0	8 mm	9 mm	9.5 mm
–03.5	8.5 mm	9.5 mm	10 mm
–06.5	11.5 mm	12.5 mm	13 mm
–07.0	12 mm	13 mm	13.5 mm
–09.0	14 mm	15 mm	15.5 mm
–11.0	16 mm	17 mm	17.5 mm

Due to technical progress, all designs, specifications and components are subject to change without notice.