THIS DRAWING IS UNPUBLISHED. RELEASED FOR PUBLICATION 20
© COPYRIGHT - BY - ALL RIGHTS RESERVED.

REVISIONS					
P	LTR	DESCRIPTION	DATE	DWN	APVD
	Z1	REVISED PER ECO-11-005150	21MAR2011	RK	HMR
	Z2	NEW DRAWING CREATED IN CREO	26JUNE2014	JBJH	BRUN

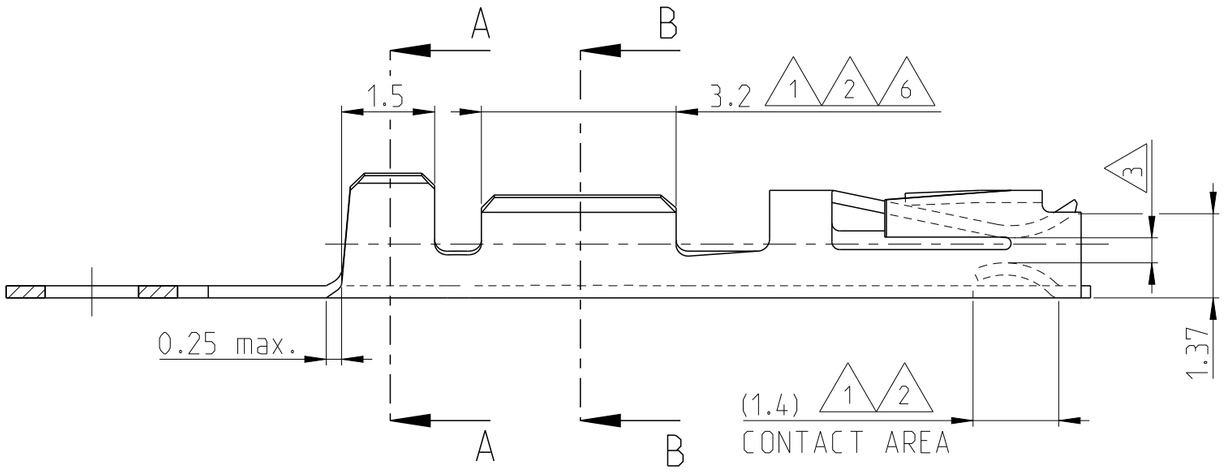

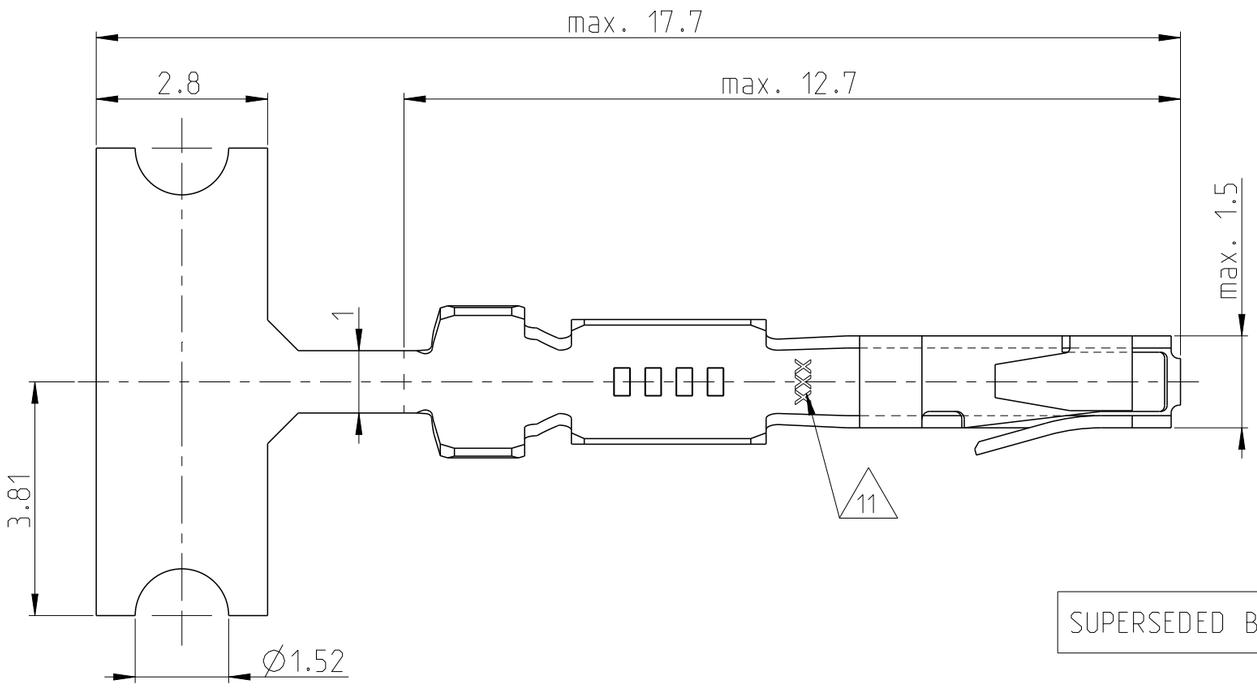

SECTION A-A

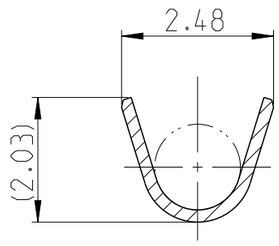

SECTION B-B

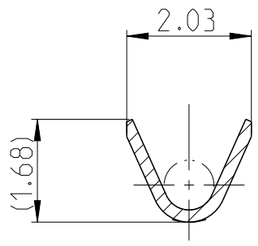

NOTES:

1. UNDERCOTING: 0.8 µm NICKEL OVERALL.
   CONTACT AREA: 0.8 µm GOLD.
   CRIMP AREA: GOLDFLASH
2. UNDERCOATING: 0.8 µM NICKEL OVERALL.
   CONTACT AREA: 1.25 µm GOLD.
   CRIMP AREA: GOLDFLASH
3. SUITABLE FOR 0.64x0.64 POST.
6. UNDERCOATING: 0.8 µm NICKEL OERALL.
   CONTACT AREA: 0.4 µm GOLD.
   CRIMP AREA: GOLDFLASH.
7. ADVANCED PROD. NRS. FOR DIN 41612 PART 5 SPEC.
8. PLATING: 2.0 µm TIN OVERALL.
9. REVERSE REELED FOR USE WITH MINI APPLICATOR.
10. STANDARD REELED FOR USE WITH STANDARD APPLICATOR.
11. TRADE MARK.

WIRE RANGE: 20-24 (26) AWG
INSULATION RANGE: 1.40 MAX DIA.

SUPERSEDED BY 166500-2

LOOSE PIECE NUMBER	PLATING	MATERIAL	STRIPNUMBER	REV
166722-1	1	PHOSPHORBRONZE	1-166500-2 (10)	Z
166722-6	8		1-166500-1 (10)	Z
166722-6	8		166500-9 (9)	Z
(7) 166722-4	6		166500-7 (9)	W
166722-2	2		166500-4 (9)	Z
166722-1	1		166500-2 (9)	Z

THIS DRAWING IS A CONTROLLED DOCUMENT.

DIMENSIONS: mm

TOLERANCES UNLESS OTHERWISE SPECIFIED:
n. ISO 8015
n. ISO 2768-mH
0 PLC ±-
1 PLC ±-
2 PLC ±-
3 PLC ±-
4 PLC ±-
ANGLES ±1°

MATERIAL - -

FINISH - -

DWN M.Pfeilschifter 18JUL2000
CHK V.Huhn 18JUL2000
APVD - -
PRODUCT SPEC -
APPLICATION SPEC -
WEIGHT -

TE Connectivity

NAME STANDARD TANDEM SPRING RECEPTACLE

SIZE	CAGE CODE	DRAWING NO	RESTRICTED TO
A3	00779	C-166500	-

Customer Drawing | SCALE 10:1 | SHEET 1 OF 1 | REV Z2