REV.	ECN NO OR DESCRIPTION	REVISED	DATE
A	INITIAL RELEASE	孫一中	2009.02.11

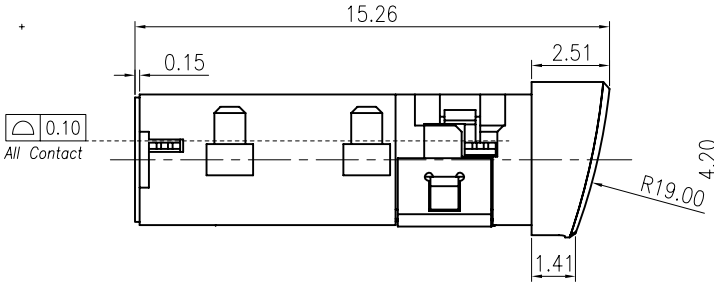

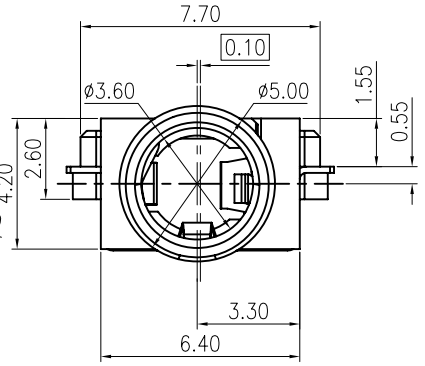

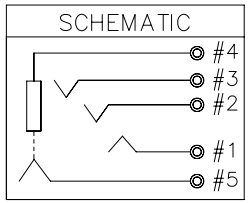

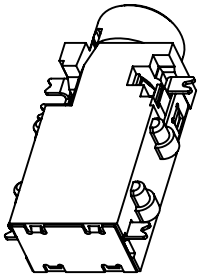

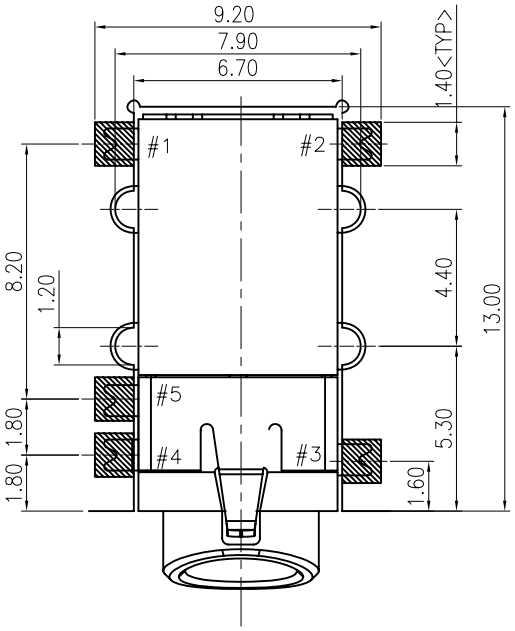

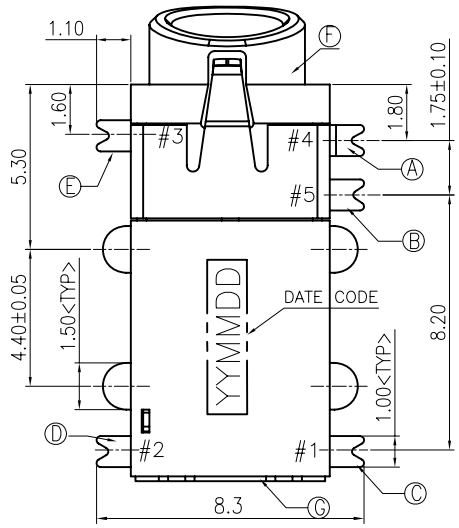

SPECIFICATIONS:

1. ELECTRICAL CHARACTERISTICS:
   1-1.WORKING VOLTAGE: 36V MAX.
   1-2.CONTACT RESISTANCE: 30mΩMAX(INITIAL).
2. MATING FORCE 3Kg MAX.UNMATING FORCE 0.3Kg MIN.
3. LIFE TEST: 10,000 CYCLES MIN.
4. GREEN PRODUCT IDENTIFICATION MARK ON JACK: ◎
5. OTHER GENERAL SPEC. TO REFER "2SJ2286 SERIES SPEC".
6. PACKING: TAPE & REEL
7. TO CONFORM TO SINGATRON HAZARDOUS SUBSTANCE FREE SPEC.
8. GREEN PRODUCT IDENTIFICATION LABEL ON PACKING:
9. FOR REFLOW SOLDERING LEAD-FREE PROCESS.
10. SOLDER HEAT RESISTANCE REFLOW SOLDERING 260°C 10SECS.
11. DATE CODE: YY MM DD
    - DD: Day
    - MM: Month
    - YY: Year

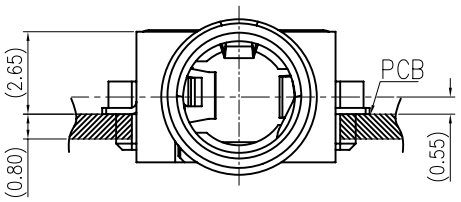

RECOMMENDED PCB LAYOUT
TOP VIEW (TOLERANCE:±0.05)

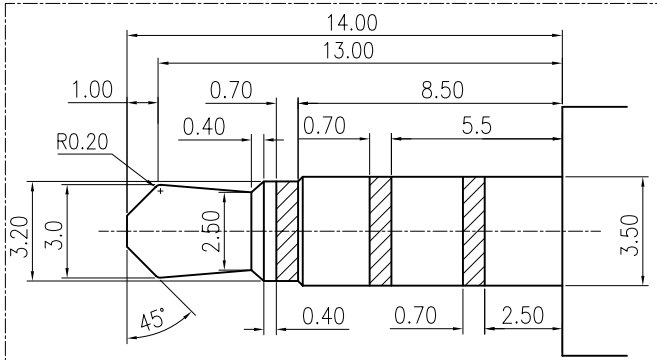

3.5ø 4POLE PLUG (TOLERANCE:±0.05)

NO	DESCRIPTION	QTY	MATERIAL	PLATING & COLOR
G	COVER	1	SUS 0.15	
F	BODY	1	THERMOPLASTIC HIGH TEMP	BLACK COLOR
E	RING SPRING B	1	COPPER ALLOY 0.2t	GOLD FLASH
D	RING SPRING A	1	COPPER ALLOY 0.2t	GOLD FLASH
C	TIP SPRING	1	COPPER ALLOY 0.2t	GOLD FLASH
B	GROUND	1	COPPER ALLOY 0.2t	GOLD FLASH
A	EARTH	1	COPPER ALLOY 0.2t	GOLD FLASH

UNLESS OTHERWISE SPECIFED TOLERANCES

DECIMALS: X :±0.5, X.X :±0.3, X.XX :±0.2
ANGLES: X :±2°, X.X :±1°

Singatron Enterprise Co., Ltd.
信音企業股份有限公司

TITLE	3.5ø PHONE JACK			
DWN	孫一中	PART NO. 2SJ2286-000111		
CHKD		SCALE 6:1	UNIT: mm	
APVD	SEAN	SIZE: A4	SHEET: 1OF1	REV: A

CUSTOMER COPY

文件編號 RD-06-043-A