THIS DRAWING IS UNPUBLISHED. RELEASED FOR PUBLICATION -,- .
© COPYRIGHT - BY TYCO ELECTRONICS CORPORATION. ALL INTERNATIONAL RIGHTS RESERVED.

LOC	DIST
AD	00

REVISIONS

P	LTR	DESCRIPTION	DATE	DWN	APVD
	M1	REV PER ECO-07-002646	01MAR07	BC	RP
	N	REV PER ECO-09-009485	06JUN09	AEG	DD

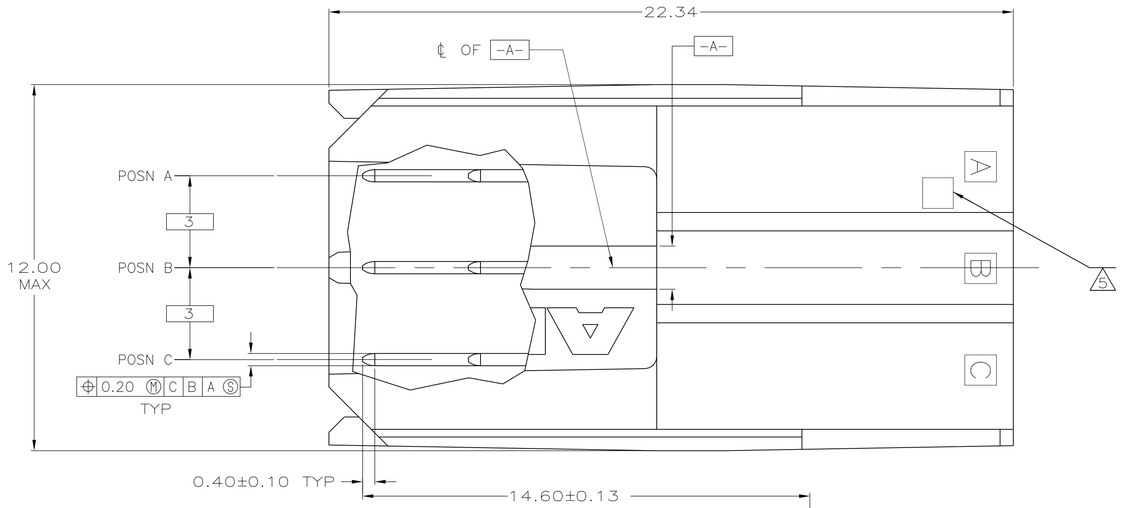

1. MATERIAL: HOUSING: POLYESTER. COLOR: GRAY. UL 94V-0.
   CONTACT: PHOSPHOR BRONZE.
2. FINISH: CONTACT MATING AREA: 1.27μm MIN GOLD OR 0.08μm MIN GOLD OVER 0.76μm MIN PALLADIUM-NICKEL.
   ACTION PIN AREA: 0.5μm MIN TIN-LEAD PLATE,
   ALL OVER 1.27μm MIN NICKEL UNDERPLATE.
3. FINISH: CONTACT LUBRICATION WITH BELLCORE APRROVED LUBRICANT, TECHNICAL REFERENCE: TR-NWT-001217, ISSUE 1, SEPTEMBER 1992.
4. MATERIAL: HOUSING: LCP; COLOR: RED. UL 94V-0.
   CONTACT: PHOSPHOR BRONZE.
5. NUMBER "3" MARKED IN THIS AREA.
6. MATERIAL: HOUSING: POLYESTER. COLOR: GRAY. UL 94V-0.
   CONTACT: HIGH CURRENT COPPER ALLOY.
7. REFERENCE APPLICATION SPEC 114-1103 FOR RECOMMENDED PLATED THRU HOLE DIAMETER AND PLATING THICKNESSES.
8. CURRENT RATING 10A/CONTACT FOR PHOS BRONZE CONTACTS AND 16A/CONTACT FOR HIGH CURRENT COPPER ALLOY CONTACTS PER PRODUCT SPEC 108-1651.

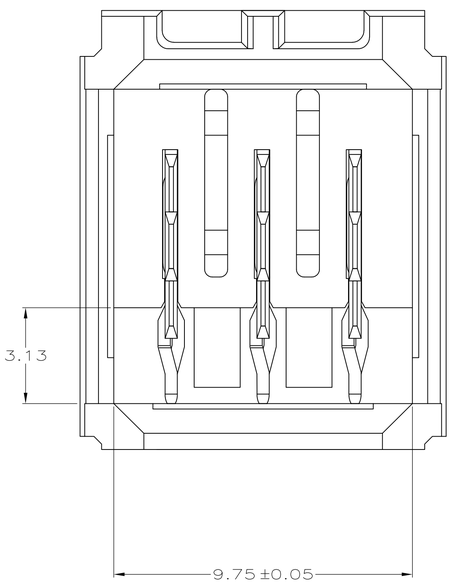

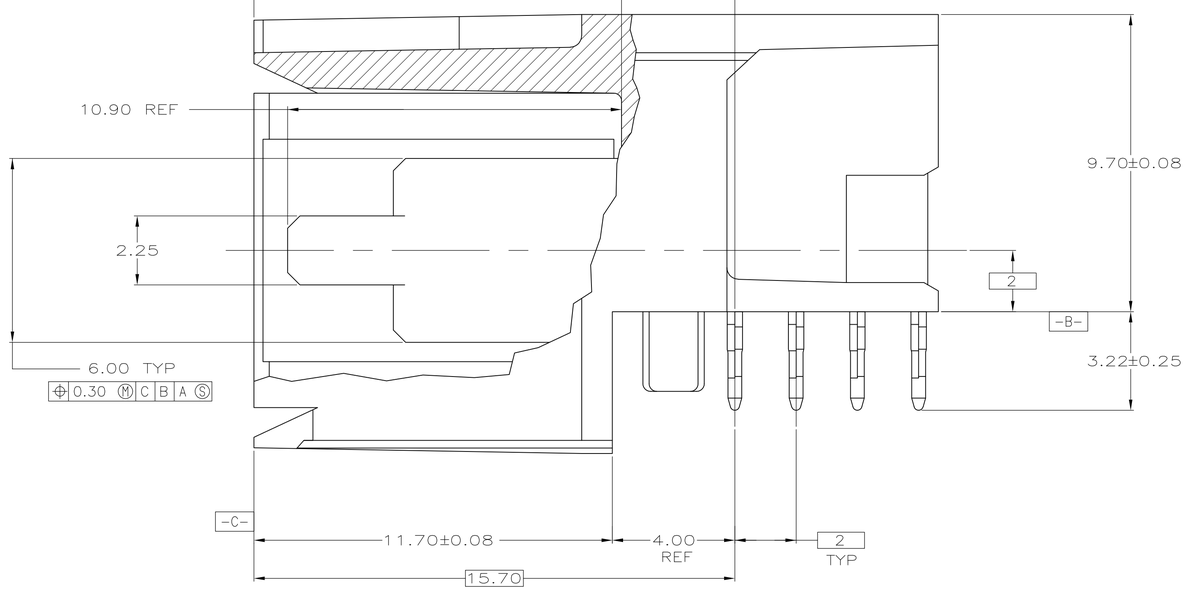

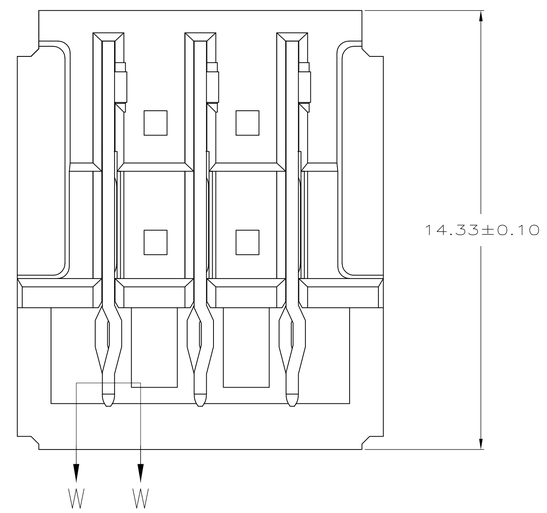

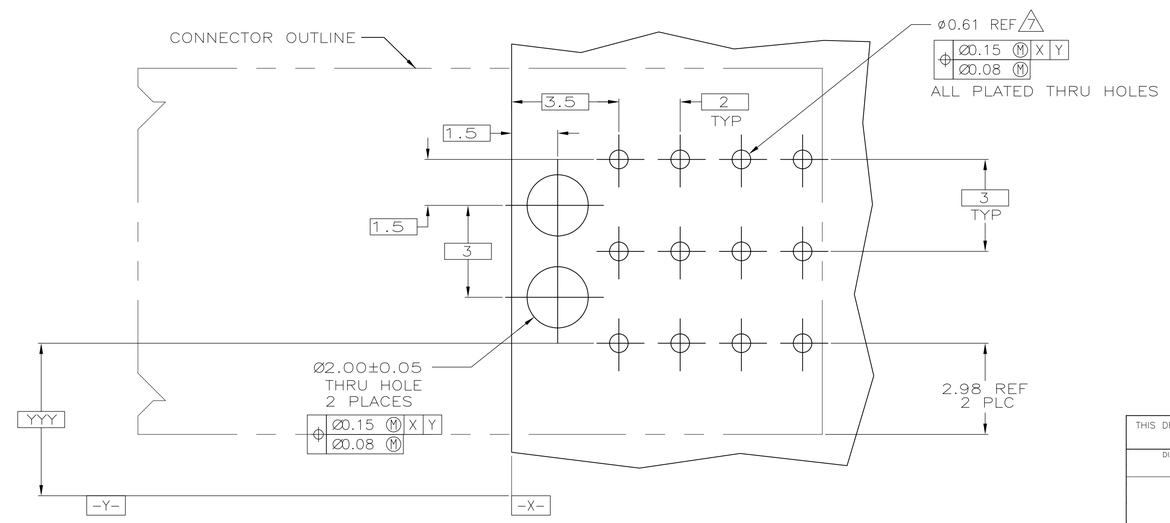

RECOMMENDED PCB HOLE LAYOUT

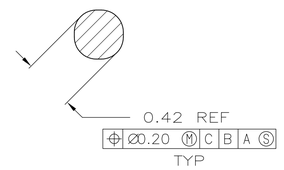

SECTION W-W
SCALE 40:1

	2 3 6	5-223961-1
	1 2 3 5	223961-8
OBSOLETE	2 3 4	223961-2
	1 2 3	223961-1
	MATERIAL/FINISH	PART NUMBER

THIS DRAWING IS A CONTROLLED DOCUMENT.

DIMENSIONS: mm

TOLERANCES UNLESS OTHERWISE SPECIFIED:
0 PLC ± -
1 PLC ± -
2 PLC ± 0.13
3 PLC ± -
4 PLC ± -
ANGLES ± -

MATERIAL: SEE TABLE
FINISH: SEE TABLE

DWN R.BUCHHEISTER 20/SEP/95
CHK N. NORRIS 20/SEP/95
APVD D.SINISI 20/SEP/95
PRODUCT SPEC —
APPLICATION SPEC —
WEIGHT —

Tyco Electronics
Tyco Electronics Corporation
Harrisburg, PA 17105-3608

NAME: ASSEMBLY, RIGHT ANGLE HEADER, W/ RETENTION PEGS, UNIVERSAL POWER MODULE

SIZE	CAGE CODE	DRAWING NO	RESTRICTED TO
A1	00779	C-223961	—

CUSTOMER DRAWING | SCALE 10:1 | SHEET 1 OF 1 | REV N

4805 (1/08)