THIS DRAWING IS UNPUBLISHED. RELEASED FOR PUBLICATION -,- .
© COPYRIGHT - By - ALL RIGHTS RESERVED.

LOC	DIST
HM	00

REVISIONS

P	LTR	DESCRIPTION	DATE	DWN	APVD
	P1	REVISED PER ECO-11-005033	21MAR11	RK	HMR

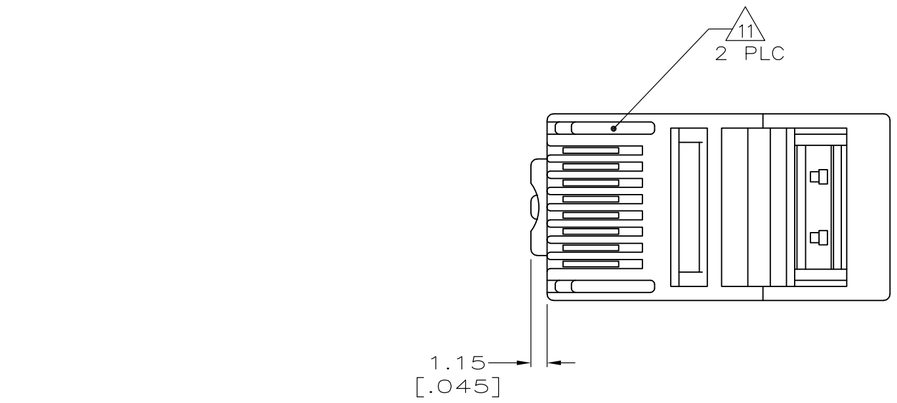

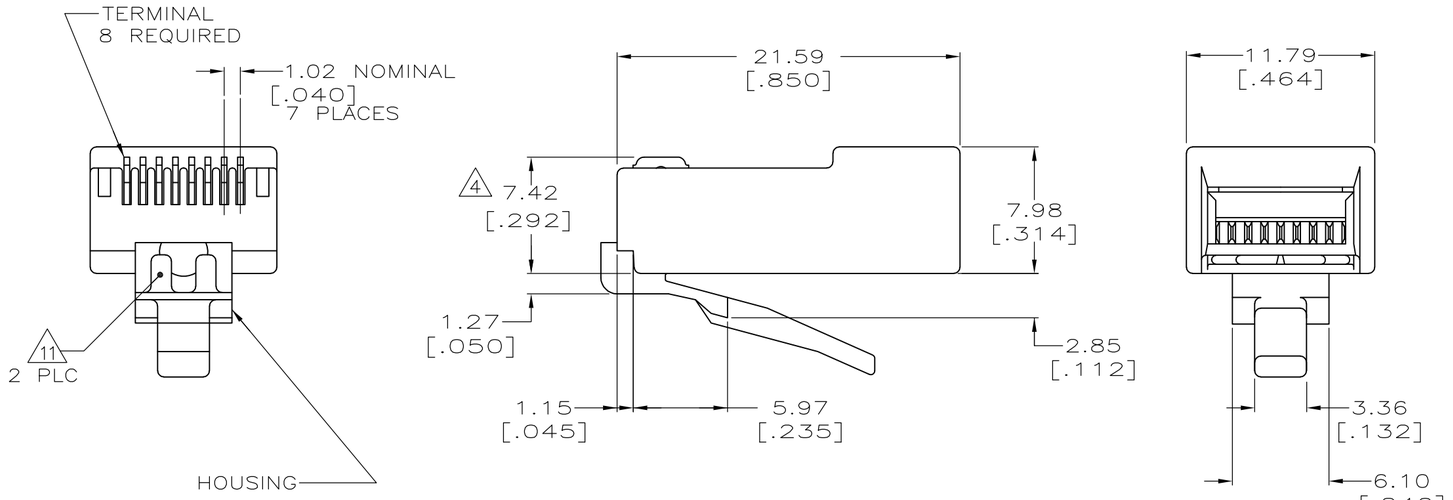

1. DIMENSIONS ARE MAXIMUM UNLESS OTHERWISE SPECIFIED.
2. MATERIAL: HOUSING-POLYCARBONATE,CLEAR. TERMINAL-0.36[.014] THICK PHOSPHOR BRONZE PLATED WITH 1.27µm[.000050] THICK GOLD IN LOCALIZED GOLD PLATE AREA, GOLD FLASH OVER THE REMAINDER, OVER 2.54µm[.000100] THICK NICKEL UNDERPLATE.
3. PLUG WILL ACCEPT 26 OR 28 AWG STRANDED WIRE HAVING A MAXIMUM INSULATION DIAMETER OF 0.89-0.99[.035-.039] AND A MAXIMUM OVAL CABLE JACKET OF 2.54 X 8.89[.100 X .350].
4. TERMINATED DIMENSION 6.15[.242] MAXIMUM.
6. 10,000 ASSEMBLIES PER PACKAGE.
7. 500 ASSEMBLIES PER PACKAGE.
8. 100 ASSEMBLIES PER PACKAGE.
9. 25 ASSEMBLIES PER PACKAGE.

9	5-554739-4
8	5-554739-3
7	5-554739-2
6 11	5-554739-1
REELED	554739-1
PACKAGED	PART NUMBER

SUPSD BY 5-554739-2

THIS DRAWING IS A CONTROLLED DOCUMENT.

DIMENSIONS: mm[INCHES]

TOLERANCES UNLESS OTHERWISE SPECIFIED:
0 PLC ± -
1 PLC ± -
2 PLC ± - (1)
3 PLC ± -
4 PLC ± -
ANGLES ± -

MATERIAL - (2)
FINISH - (2)

DWN YTP/UTA 8-27-93
CHK C.WHITT 9-15-93
APVD TONEY/MCGRATH 9-20-93
PRODUCT SPEC 108-1163
APPLICATION SPEC 114-6016
WEIGHT -

TE Connectivity

NAME MODULAR PLUG ASSEMBLY, 8 POSITION, FLAT OVAL CABLE

SIZE	CAGE CODE	DRAWING NO	RESTRICTED TO
A2	00779	C-554739	-

CUSTOMER DRAWING | SCALE 4:1 | SHEET 1 OF 1 | REV P1

554739

1471-9 (3/11)