Wire to Board Connectors
Dynamic Series Connectors/D-3000 Series
D-3200S (A High-Voltage Version of Standard D-3100S)

Mating Dimensions

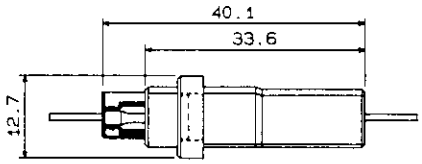

Panel/Free Hanging Type

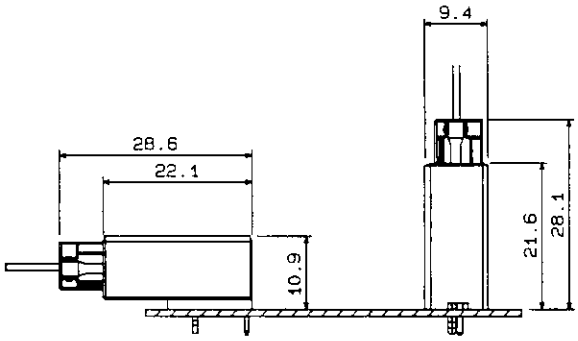

Horizontal/Vertical Type

External Dimensions

■Receptacle Housing

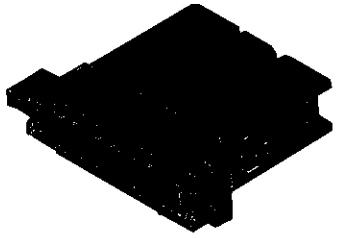

5-and 6-position receptacle housings differ slightly in shape with each other. Check with diagram.

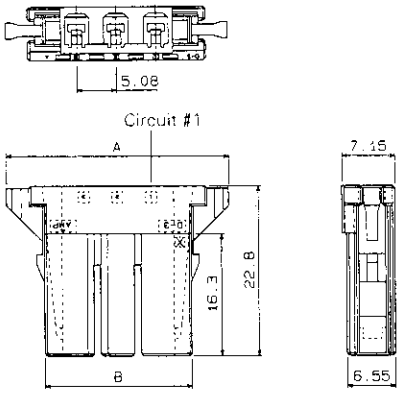

No.of Pos.	Part Number	Dimensions A	Dimensions B
2	□-178128-2	24.62	14.16
3	□-178128-3	29.7	19.24
4	□-178128-4	34.78	24.32
5	□-178128-5	39.86	29.4
6	□-178128-6	44.94	34.48

■Tab Housing

Panel Type



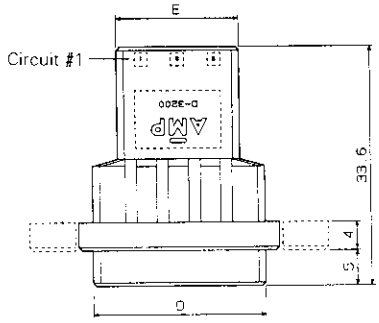

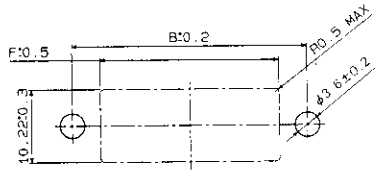

Panel Cutout

When mounting panel from the front, apply clamping torque of less than 49N.

Free Hanging Type

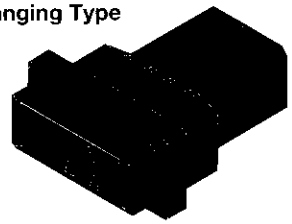

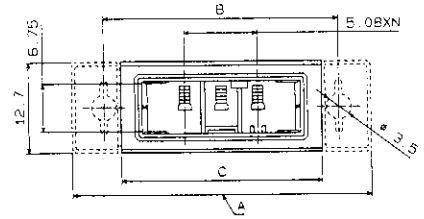

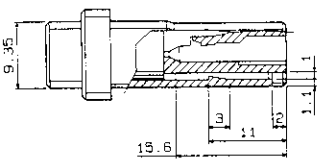

No.of Pos.	Part Number Panel Type	Part Number Free-Hanging Type	Dimensions A	B	C	D	E	F
2	□-179553-2	□-179552-2	36.83	28	23.03	19.08	12.08	20
3	□-179553-3	□-179552-3	41.91	33	28.11	24.16	17.16	25
4	□-179553-4	□-179552-4	46.99	38	33.19	29.24	22.24	30