THIS DRAWING IS UNPUBLISHED. RELEASED FOR PUBLICATION ,19 .
© COPYRIGHT 19 BY AMP INCORPORATED. ALL RIGHTS RESERVED.

| LOC | DIST |
|---|---|
| GP | 00 |

REVISIONS

| P | LTR | DESCRIPTION | DATE | DWN | APVD |
|---|---|---|---|---|---|
| | 0 | RELEASED PER EC 0513-0196-03 | 31JUL03 | JR | JG |

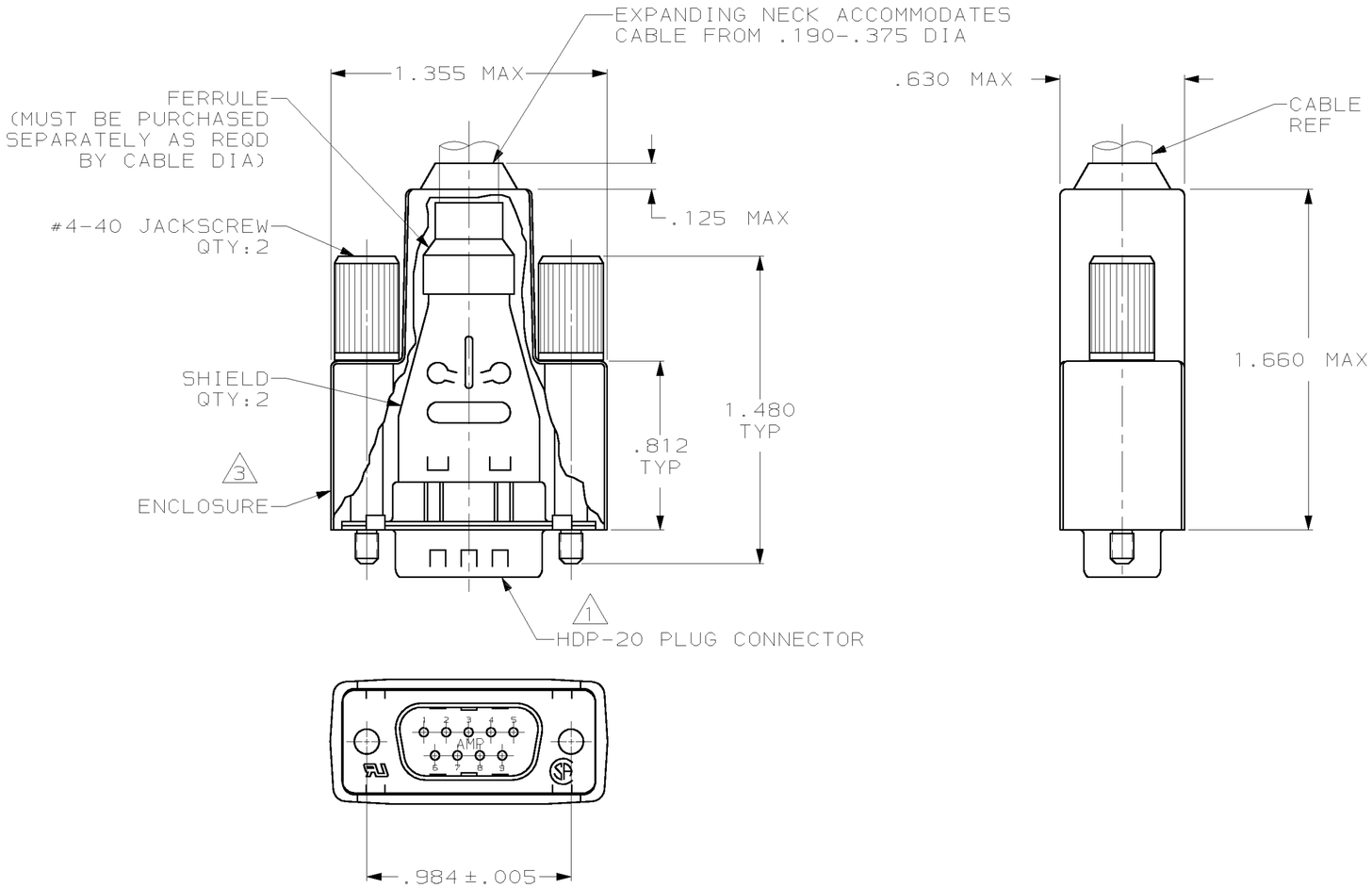


1. PLUG ACCEPTS SIZE 20 DF PIN CONTACTS. CONTACTS MUST BE PURCHASED SEPARATELY.

2. ALL PARTS SHIPPED UNASSEMBLED.

3. FLAME RETARDANT 94V-0 RATED, STYRENE POLYOLEFIN OR PVC, BLACK.

4. FLAME RETARDANT 94V-0 RATED GLASS FILLED, NYLON OR POLYESTER, BLACK.

5. STEEL PER ASTM A109.

6. .000200 MIN TIN PLATE OVER .000100 MIN COPPER UNDERPLATE.

7. COMPONENTS INDIVIDUALLY BULK PACKED.

8. ZINC ALLOY.

9. ZINC PHOSPHATE COATING, BLACK.

| 7 | W/LOGO | 9 | 8 | 1658655-1 |
|---|---|---|---|---|
| PACKAGING | REMARKS | JACKSCREWS FINISH | JACKSCREWS MATERIAL | PART NUMBER |

THIS DRAWING IS A CONTROLLED DOCUMENT.

DIMENSIONS: INCH

TOLERANCES UNLESS OTHERWISE SPECIFIED:
0 PLC ±-
1 PLC ±-
2 PLC ±-
3 PLC ±.020
4 PLC ±-
ANGLES ±-

MATERIAL INSERT: 4
SHELLS & SHIELDS: 5
JACKSCREWS: SEE TABLE

FINISH
SHELLS & SHIELDS: 6
JACKSCREWS: SEE TABLE

DWN J.REITZEL 31JUL03
CHK S.BOLASH 31JUL03
APVD M.WALMSLEY 31JUL03
PRODUCT SPEC 108-40030
APPLICATION SPEC 114-40030
WEIGHT –

AMP Incorporated
Harrisburg, PA 17105-3608

NAME
PLUG KIT, SHIELDING ENCLOSURE, 9 POSN, SIZE 1, AMPLIMITE™ HDP-20

| SIZE | CAGE CODE | DRAWING NO | RESTRICTED TO |
|---|---|---|---|
| A2 | 00779 | C- 1658655 | – |

CUSTOMER DRAWING | SCALE 2:1 | SHEET 1 OF 1 | REV 0

1658655

AMP 1471-9 REV 11JUN97