DRAWING MADE IN THIRD ANGLE PROJECTION

THIS DRAWING IS UNPUBLISHED. RELEASED FOR PUBLICATION ,19 .
© COPYRIGHT 19 BY AMP INCORPORATED. ALL INTERNATIONAL RIGHTS RESERVED.

LOC	DIST	P	F
AJ	16		

REVISIONS

ZONE	LTR	DESCRIPTION	DATE	APPD
	A	REVISED PER EC 0220-0007-96	01FEB96	MEC

1. BRASS PER ASTM-B-16
2. BRASS PER ASTM-B-36
3. PTFE PER MIL-P-19468
4. SILICONE RUBBER PER ZZ-R-765
5. STAINLESS STEEL PER ASTM-B-167
6. NICKEL PLATE PER QQ-N-290, 1.27µm [.000050] MIN THICKNESS
7. NICKEL PLATE PER QQ-N-290, 4.45µm [.000175] MIN THICKNESS
8. PASSIVATE PER QQ-P-35
9. ZINC DIE CAST PER ASTM-B-86

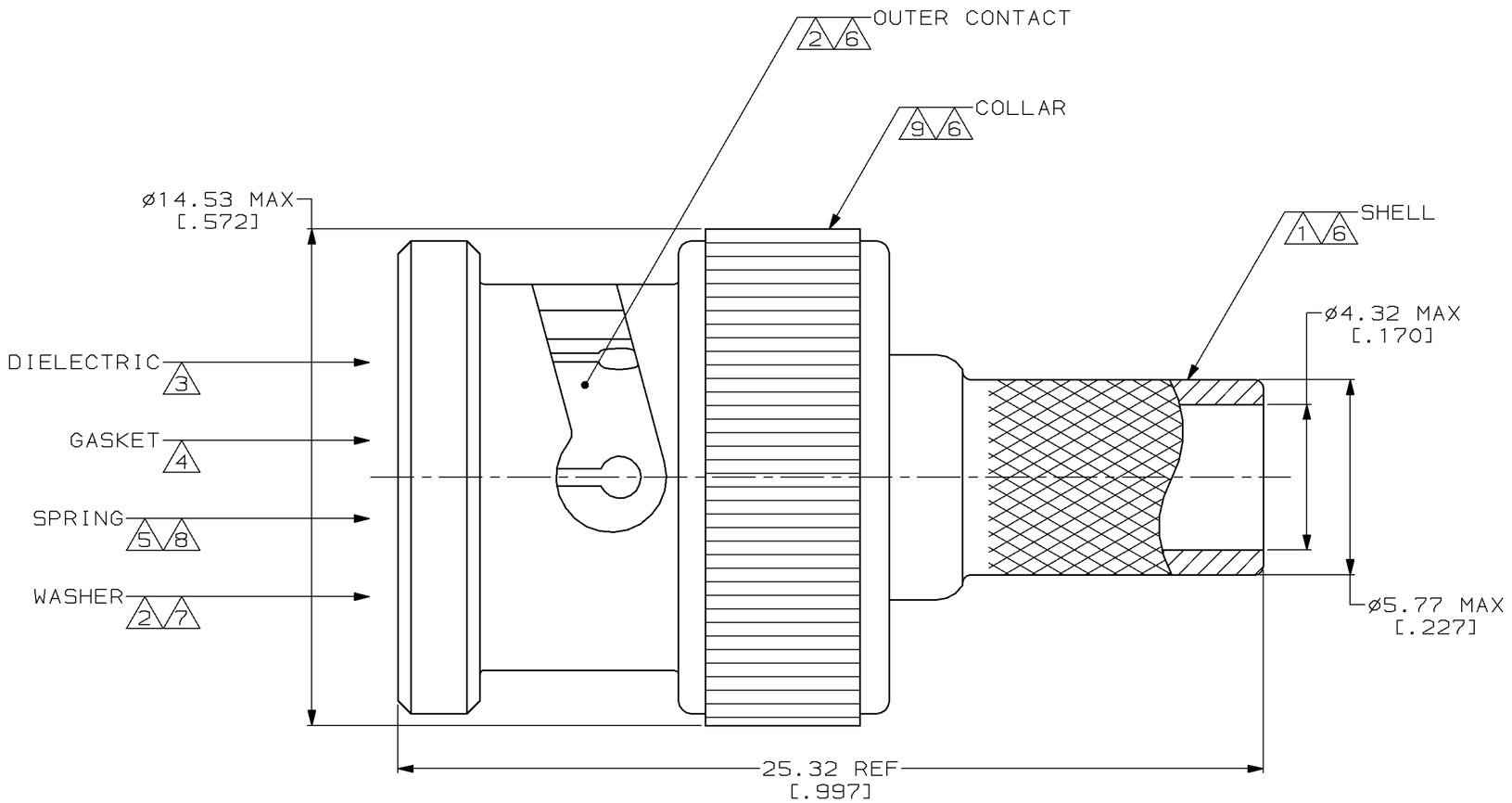

414634

414634-1

PART NUMBER

PART NO

DO NOT SCALE PRINT. UNLESS SPECIFIED DIMENSIONS IN mm [INCHES] TOLERANCES ON : 2 PLC DEC ± - 3 PLC DEC ± - ANGLES ± -	DR 10/SEPT/93 M.E. COWHER	AMP Incorporated Harrisburg, PA 17105-3608
	CHK 14/SEPT/93 L. OH	
	APPD 14/SEPT/93 M. PHILLIPS	NAME PLUG ASSEMBLY, COMMERCIAL BNC
MATERIAL SEE NOTES	APPD 14/SEPT/93 M.E. COWHER	
	PRODUCT SPEC -	
FINISH SEE NOTES	APPLICATION SPEC -	SIZE C / CAGE CODE 00779 / DRAWING NO C-414634
	WEIGHT _	SCALE 8:1 / SHEET 1 OF 1

THIS DRAWING IS A CONTROLLED DOCUMENT FOR AMP INCORPORATED. IT IS SUBJECT TO CHANGE AND THE CONTROLLING ENGINEERING ORGANIZATION SHOULD BE CONTACTED FOR THE LATEST REVISION.

CUSTOMER DRAWING