THIS DRAWING IS UNPUBLISHED. RELEASED FOR PUBLICATION -,- .
© COPYRIGHT - By - ALL RIGHTS RESERVED.

LOC	DIST
FT	47

REVISIONS

P	LTR	DESCRIPTION	DATE	DWN	APVD
	N2	REVISED PER ECO-11-004587	11MAR11	RK	HMR

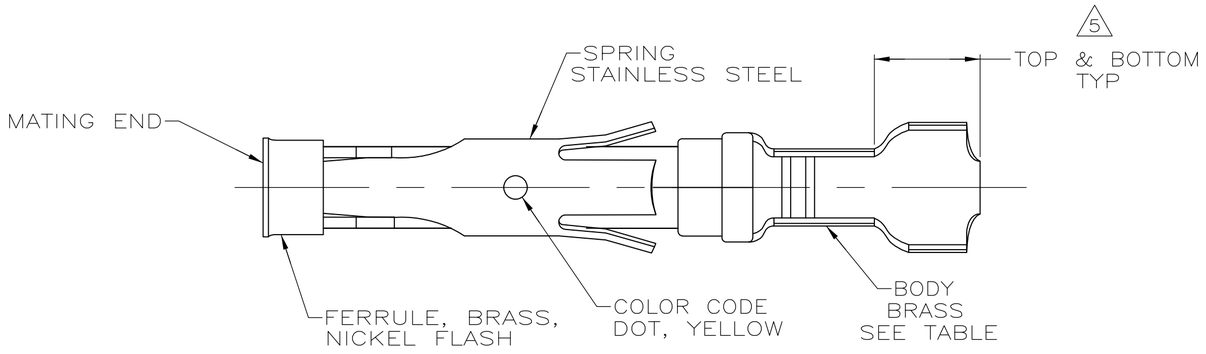

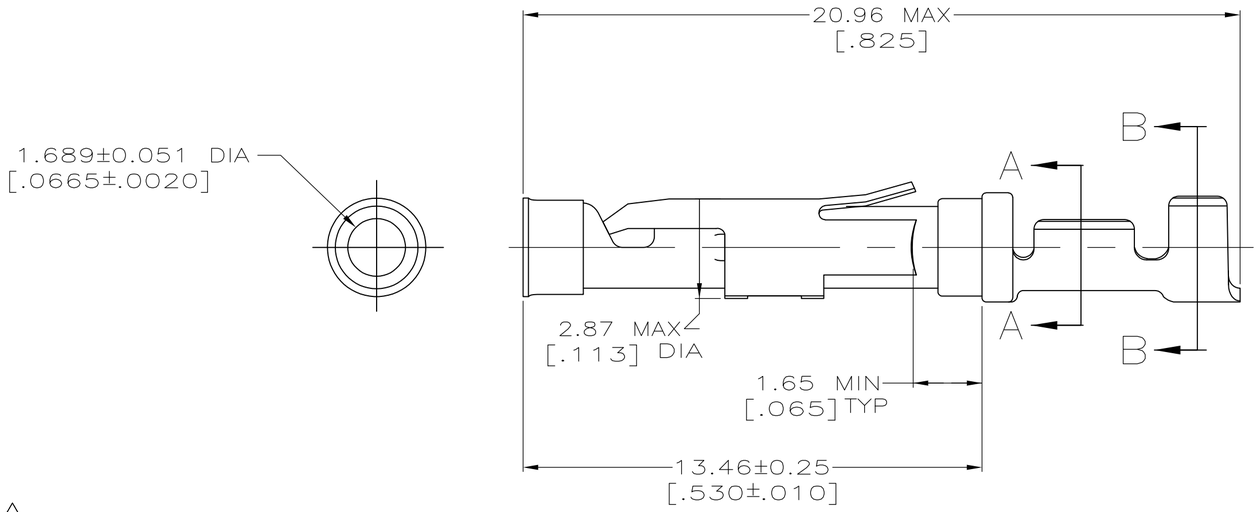

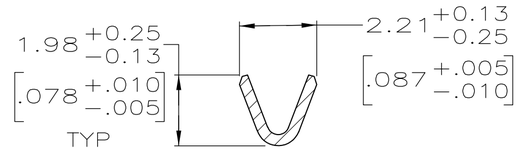

SECTION A–A

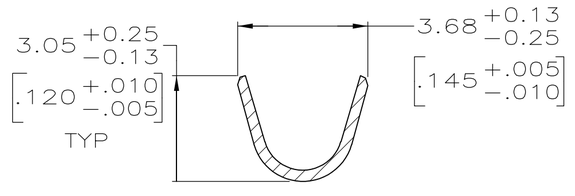

SECTION B–B

1. 1 0.76µm [.000030] MIN GOLD PER MIL-G-45204 ON MATING END FOR A LENGTH OF 5.08 [.200] MIN WITH GOLD FLASH ON THE REMAINDER OVER 0.76µm [.000030] MIN NICKEL PER QQ-N-290.
2. 2 0.76µm [.000030] MIN GOLD PER MIL-G-45204 ON MATING END FOR A LENGTH OF 5.08 [.200] MIN WITH A UNIFORM GRADIENT TO 0.25µm [.000010] MIN GOLD PER MIL-G-45204 ON THE REMAINDER OVER 0.76µm [.000030] MIN NICKEL PER QQ-N-290.
3. 3 0.38µm [.000015] MIN GOLD PER MIL-G-45204 ON MATING END FOR A LENGTH OF 5.08 [.200] MIN WITH GOLD FLASH ON THE REMAINDER OVER 0.76µm [.000030] MIN NICKEL PER QQ-N-290.
4. 4 1.27µm [.000050] MIN TIN-LEAD PER MIL-T-10727 OVER 0.76µm [.000030] MIN NICKEL PER QQ-N-290.
5. 5 GOLD PLATING NEED NOT APPEAR IN THIS AREA.
6. WIRE RANGE 24-20 AWG.
   INSULATION RANGE 2.03[.080]-2.54[.100].
7. 7 0.38µm [.000015] MIN GOLD PER MIL-G-45204 ON MATING END FOR A LENGTH OF 5.08 [.200] MIN, 1.27µm [.000050] MIN TIN-LEAD PER MIL-T-10727 FOR A LENGTH OF 5.69 [.224] MIN ON OPPOSITE END, BOTH OVER 1.27µm [.000050] MIN NICKEL PER QQ-N-290 ON ENTIRE CONTACT.
8. 8 1.27µm [.000050] MIN TIN PER MIL-T-10727 OVER 0.76µm [.000030] MIN NICKEL PER QQ-N-290.
9. 9 OBSOLETE PARTS: OBSOLETE CIS STREAMLINING PER D.RENAUD/D.SINISI

	PACKAGING TYPE	BODY FINISH	STRIP P/N REF	PART NO
	SMALL PACK	8	1-66399-0	1-66399-1
	STANDARD	8	1-66331-4	1-66399-0
	SMALL PACK	1	66331-4	66399-9
9 OBSOLETE	SMALL PACK	3	66331-7	~~66399-8~~
9 OBSOLETE	SMALL PACK	2	66331-2	~~66399-7~~
	SMALL PACK	4	66331-1	66399-6
OBSOLETE	STANDARD	7	1-66331-2	~~66399-5~~
	STANDARD	1	66331-4	66399-4
	STANDARD	3	66331-7	66399-3
	STANDARD	2	66331-2	66399-2
	STANDARD	4	66331-1	66399-1

THIS DRAWING IS A CONTROLLED DOCUMENT.

DIMENSIONS: INCHES

TOLERANCES UNLESS OTHERWISE SPECIFIED:
0 PLC ± -
1 PLC ± -
2 PLC ± 0.13[.005]
3 PLC ± -
4 PLC ± -
ANGLES ± -

MATERIAL: SEE CALLOUTS
FINISH: SEE CALLOUTS

DWN R.SHIREY 7-30-91
CHK R.STONE 9-19-91
APVD J.ESTMAN 9-20-91
PRODUCT SPEC —
APPLICATION SPEC —
WEIGHT —

TE Connectivity

NAME: SOCKET ASSEMBLY, LOOSE PIECE, TYPE III+

SIZE	CAGE CODE	DRAWING NO	RESTRICTED TO
A2	00779	C-66399	—

CUSTOMER DRAWING | SCALE 8:1 | SHEET 1 OF 1 | REV N2

66399