THIS DRAWING IS UNPUBLISHED. RELEASED FOR PUBLICATION -,- .
© COPYRIGHT - By - ALL RIGHTS RESERVED.

LOC	DIST
—	—

REVISIONS

P	LTR	DESCRIPTION	DATE	DWN	APVD
	R	REV PER ECO-10-020411	02DEC10	SK	RL

1. WIRE BARREL WILL ACCEPT #22-28 AWG WIRE.
2. CRIMPING TOOL- USE MS3198-1 WITH APPLICABLE POSITIONER.
3. CONTACT CONFORMS TO MIL-C-39029/58, SIZE 22. & MS27493-22D.
4. NET WEIGHT- .072 GRAMS.
5. INSERTION, EXTRACTION TOOL- AMP P/N 91067-1.
6. THIS CONTACT IDENTIFIED AS MS27493-22D SUPERSEDES M24308/13-1.
7. IDENTIFICATION GROOVE IS OPTIONAL.
8. POINT OF PLATING THICKNESS MEASUREMENT.
9. PLATING: GOLD PER MIL-G-45205 OVER NICKEL PER QQ-N-290.
10. PLATING: GOLD PER ASTM-B-488 OVER COPPER PER MIL-C-14550

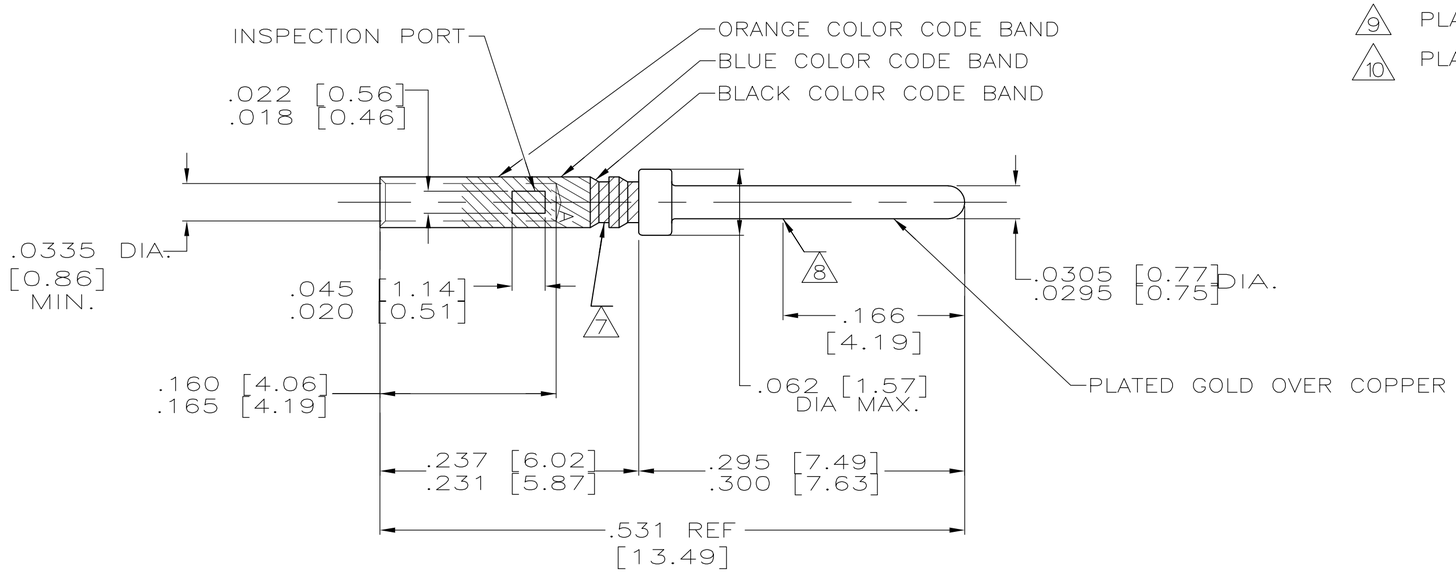

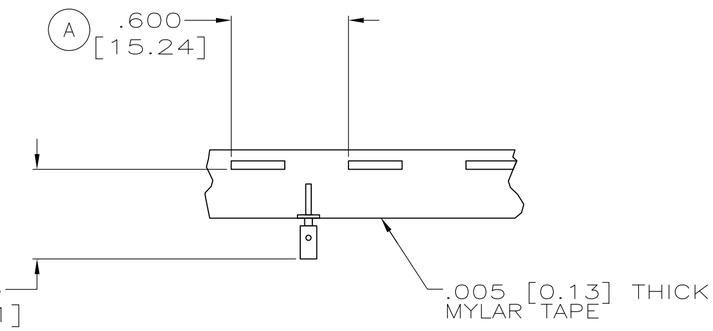

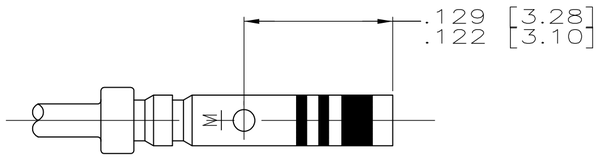

ALTERNATE CONFIGURATION

WHEN ORDERING CONTACT ON TAPE, ORDER BY THE TAPE NUMBER PLUS THE PACKAGEING CODE AS FOLLOWS:

2. FOR USE WITH AMP TAPETRONIC, PNEUMATIC TOOL-
   A. 1000 PARTS TO A BOX ADD PACKAGING CODE: 1MBOX
3. FOR USE WITH 4/8 INDENT STRIPPER CRIMPER-
   A. 1000 PARTS TO A REEL ADD PACKAGING CODE: 1MREEL
   B. 5000 PARTS TO A REEL ADD PACKAGING CODE: 5MREEL

DESCRIPTION	PLATING	PART NO.
AS SHOWN	9	204370-2
CONTACTS ON TAPE	SAME AS -2	204370-5
WITHOUT COLOR CODE	10	204370-8
CONTACTS ON TAPE WITH COLOR CODE	SAME AS -3	1-204370-2
AS SHOWN	9	1-204370-3

THIS DRAWING IS A CONTROLLED DOCUMENT.

DIMENSIONS: INCHES

TOLERANCES UNLESS OTHERWISE SPECIFIED:
0 PLC ± -
1 PLC ± -
2 PLC ± -
3 PLC ± .005
4 PLC ± -
ANGLES ± -

MATERIAL -
FINISH -

DWN R. RINEHART 10-3-90
CHK A. EMADI 10-15-90
APVD A. EMADI 10-15-90
PRODUCT SPEC —
APPLICATION SPEC —
WEIGHT —

TE Connectivity

NAME CONTACT PIN, SIZE 22D
— —

SIZE	CAGE CODE	DRAWING NO	RESTRICTED TO
A2	00779	C-204370	—

CUSTOMER DRAWING | SCALE 10:1 | SHEET 1 OF 1 | REV R

204370

1471-9 (3/11)