THIS DRAWING IS UNPUBLISHED. RELEASED FOR PUBLICATION -,- .
© COPYRIGHT - BY TYCO ELECTRONICS CORPORATION. ALL INTERNATIONAL RIGHTS RESERVED.

LOC	DIST
FT	47

REVISIONS

P	LTR	DESCRIPTION	DATE	DWN	APVD
	P	REV PER ECR 10-012675	13SEPT10	JR	SH

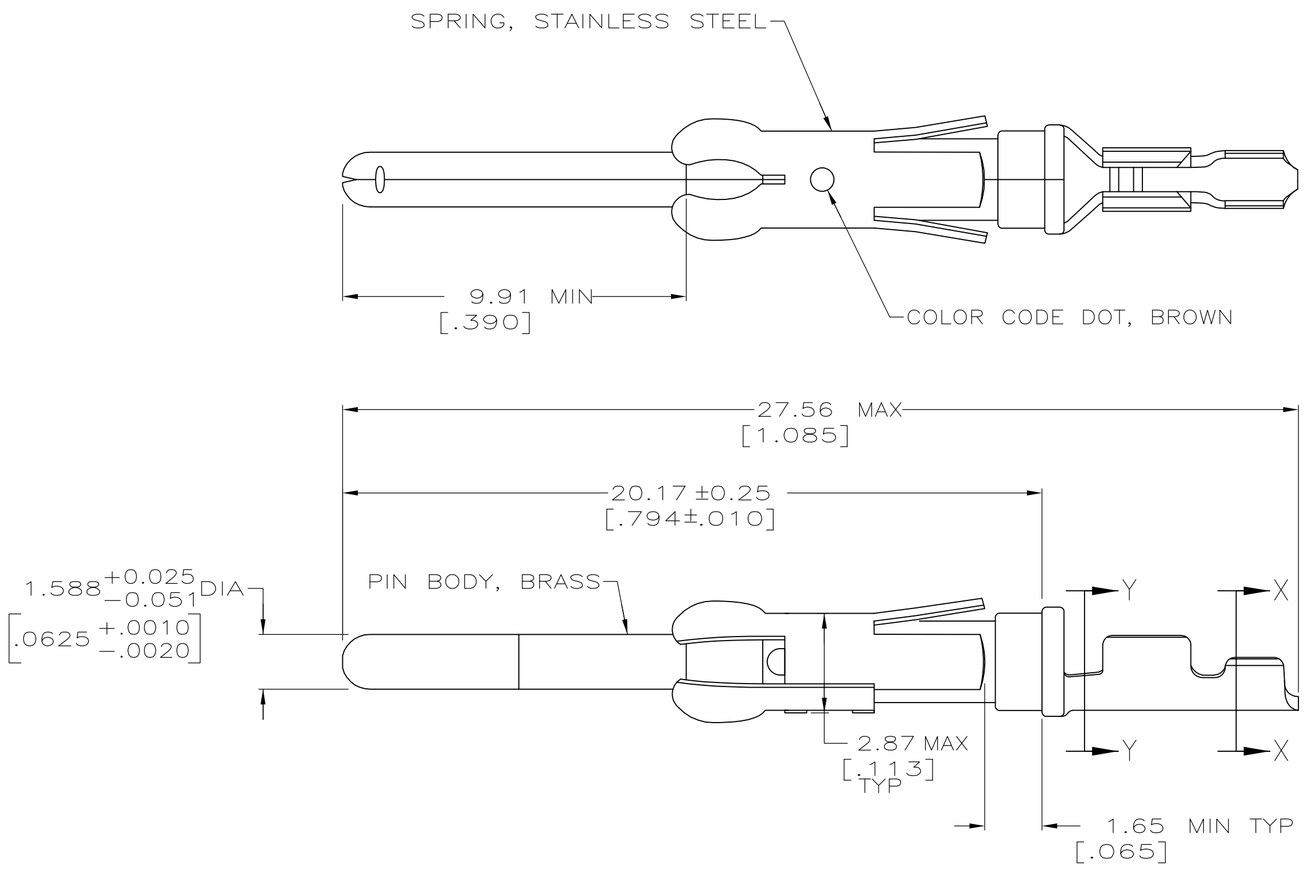

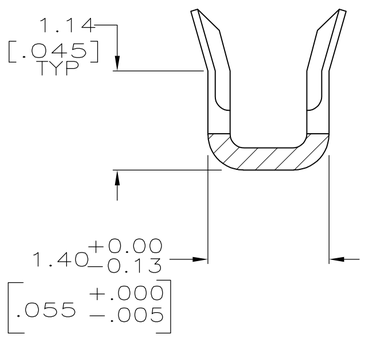

SECTION Y−Y
SCALE 20:1

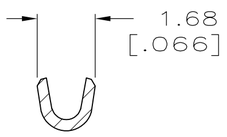

SECTION X−X

△1 0.76μm [.000030] MIN PRECIOUS METAL PLATE ON MATING END FOR A LENGTH OF 5.08 [.200] MIN OVER 1.27μm [.000050] MIN NICKEL PLATE. 0.25um [.000010] MIN GOLD ON THE REMAINDER ALL OVER 1.27um [.000050] MIN NICKEL. CONFORMS TO THE REQUIREMENTS OF TYCO ELECTRONICS PRODUCT SPEC 108-10042, BASED ON EIA/ECA-364-1000.01A (CONTROLLED ENVIRONMENT APPLICATIONS).

△2 0.76μm [.000030] MIN PRECIOUS METAL PLATE ON MATING END FOR A LENGTH OF 5.08 [.200] MIN WITH A UNIFORM GRADIENT TO 0.25μm [.000010] ON REMAINDER, OVER 1.27μm [.000050] MIN NICKEL PLATE. GOLD FLASH ALL OVER. CONFORMS TO THE REQUIREMENTS OF TYCO ELECTRONICS PRODUCT SPEC 108-10042, BASED ON EIA/ECA-364-1000.01A (CONTROLLED ENVIRONMENT APPLICATIONS).

3. WIRE RANGE 26-30 AWG.
4. INSULATION RANGE 0.36[.014]-0.76[.030] DIA.

△2	66393-3	66406-4
△1	66393-1	66406-1
FINISH	STRIP REF P/N	PART NO.

THIS DRAWING IS A CONTROLLED DOCUMENT.

DIMENSIONS: MM [INCHES]

TOLERANCES UNLESS OTHERWISE SPECIFIED:
0 PLC ± -
1 PLC ± -
2 PLC ± 0.13[.005]
3 PLC ± -
4 PLC ± -
ANGLES ± -

MATERIAL: SEE CALL OUT
FINISH: PIN BODY:SEE TABLE

DWN H MOLL 9-27-90
CHK J.MCCLINTON 12-15-90
APVD A. BOULLIANNE 12-10-90
PRODUCT SPEC —
APPLICATION SPEC —
WEIGHT —

Tyco Electronics
Tyco Electronics Corporation
Harrisburg, PA 17105-3608

NAME: PIN ASSEMBLY, LOOSE PIECE, TYPE III+
—

SIZE	CAGE CODE	DRAWING NO	RESTRICTED TO
A2	00779	C-66406	—

CUSTOMER DRAWING | SCALE 8:1 | SHEET 1 OF 1 | REV P

66406