B3 DRAWING MADE IN THIRD ANGLE PROJECTION

© COPYRIGHT

P	F	ZONE	LTR	DESCRIPTION	DATE	APPROVED
			N1	REVISED PER ECO-11-005294	05APR11	HMR

LOC CM DIST 53

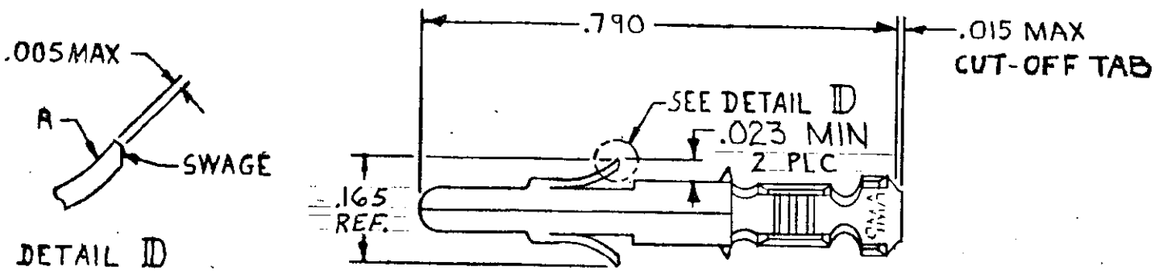

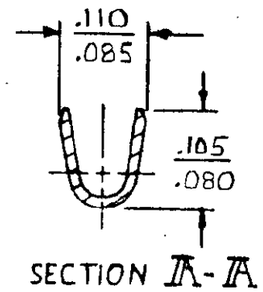

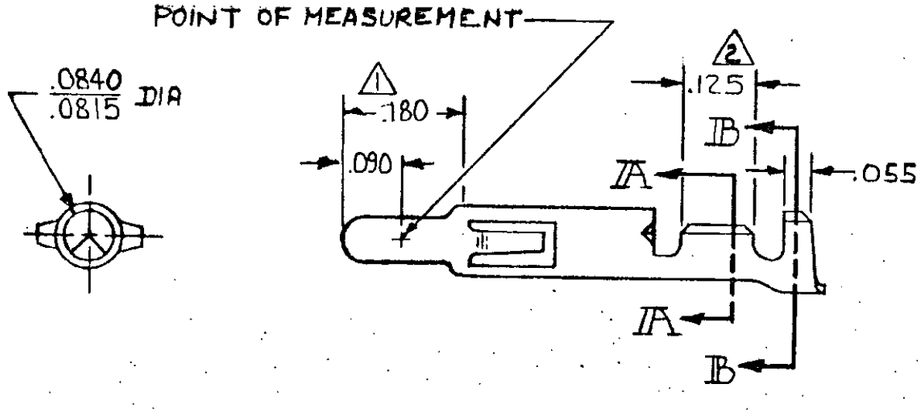

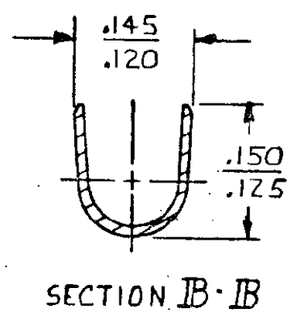

1. PLATED WITH .000030 GOLD, OVER .000050 NICKEL UNDERPLATE.
2. PLATED INTERNALLY WITH .000030 GOLD.

FINISH	MATERIAL	PART NO
GOLD 1	.012 BRASS	350690-7
PRE-TIN	.012 PH. BRZ.	350690-3
GOLD 1 2	.012 BRASS	350690-2
PRE-TIN		350690-1

UNLESS OTHERWISE SPECIFIED DIMENSIONS ARE IN INCHES.
TOLERANCES ON:
DECIMALS ± .015
ANGLES ±

WIRE RANGE
24-18 AWG

INSULATION RANGE
.100 DIA MAX

CONTRACT NO

DR M. FEHER 5-6-81

CHK D.S. Heide 6/9/81

APPD R. Polestuk 6-10-81

APPD

DSGN APPD

OTHER APPD

TE Connectivity

NAME PIN, (LOOSE PIECE)
UNIVERSAL MATE-N-LOK

SIZE	CODE IDENT NO	DRAWING NO
B	00779	350690

SCALE 4-1 SHEET

CUSTOMER DRAWING