1-645954-1 Product Details

Live Product Chat

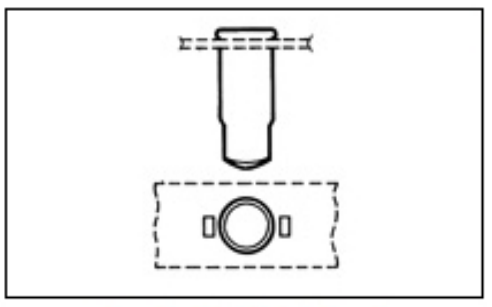

1-645954-1

TE Part Number: 1-645954-1

Obsolete

Add to Part List

Contact Product Information Center

Discrete Sockets

Not reviewed for RoHS Compliance

Product Highlights:

- Socket
- Mating Pin Dia. Range = .51 - .66 mm
- Socket Length = 4.01 mm
- Sleeve Style = Bullet Nose
- Tin Sleeve Plating

View all Features | Find Similar Products

Quick Links

- Check Pricing & Availability
- Search for Tooling
- Product Feature Selector
- Contact Us About This Product
- Request Samples NEW!

Documentation & Additional Information

Product Drawings:
- None Available

Catalog Pages/Data Sheets:
- None Available

Product Specifications:
- None Available

Application Specifications:
- Miniature Spring Socket On Polyester Strips (PDF, English)

Instruction Sheets:
- None Available

CAD Files:
- None Available

List all Documents

Additional Information:
- Product Line Information

Related Products:
- Tooling

Product Features (Please use the Product Drawing for all design activity)

Product Type Features:
- Product Type = Socket
- Socket Length (mm [in]) = 4.01 [0.158]
- Sleeve Style = Bullet Nose
- Sealant = Without
- Sleeve Material = Copper
- Recommended Hole Size (mm [in]) = 1.32 [0.052]

Body Related Features:
- Mating Pin Dia. Range (mm [in]) = 0.51 – 0.66 [0.020 – 0.026]
- Spring Material = Beryllium Copper

Contact Related Features:
- Sleeve Plating = Tin
- Contact Spring Plating = Tin
- Contact Material = Beryllium Copper

Configuration Related Features:
- Insertion Method = Hand/Semi-Automatic/Automatic

Industry Standards:
- Government/Industry Qualification = No
- RoHS/ELV Compliance = Not reviewed for ELV/RoHS compliance
- Lead Free Solder Processes = Not reviewed for lead free solder process

Operation/Application:
- Application = Production

Packaging Related Features:
- Packaging Method = Carrier Tape
- Packaging Quantity = 10,000/Reel

Other:
- Brand = AMP

© 2008 Tyco Electronics Corporation All Rights Reserved