THIS DRAWING IS UNPUBLISHED. RELEASED FOR PUBLICATION -,- .
© COPYRIGHT - BY TYCO ELECTRONICS CORPORATION. ALL RIGHTS RESERVED.

LOC	DIST
AD	47

REVISIONS

P	LTR	DESCRIPTION	DATE	DWN	APVD
	C	REVISED PER EC 0S12-0308-05	15JUL05	JDP	RW
	C1	REVISED PER ECO-09-020689	31AUG09	KK	AEG

1. HOUSING MATERIAL: LIQUID CRYSTAL POLYMER. COLOR: NATURAL
2. CONTACT MATERIAL: PHOSPHOR-BRONZE
3. CONTACT FINISH:
   UNDERPLATE (ENTIRE CONTACT):
   0.00127 MIN NICKEL.
   ON MATING SURFACES:
   CONFORMS TO ALL TESTING SPECIFIED FOR TELCORDIA UNCONTROLLED ENVIRONMENT.
   ON LEADS
   0.0006 MIN TIN-LEAD OVER UNDERPLATE.
   LUBRICATION (ENTIRE CONTACT):
   SURFACE CONDITIONER PER AMP SPEC 112-1002 AFTER PLATING.
4. PART MARKING PER AMP SPECIFICATION 115-9009, LOCATED APPROXIMATELY AS SHOWN.
5. OBSOLETE PARTS: OBSOLETE CIS STREAMLINING PER D.RENAUD/D.SINISI

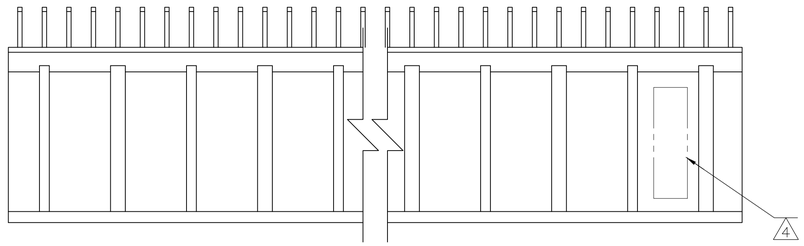

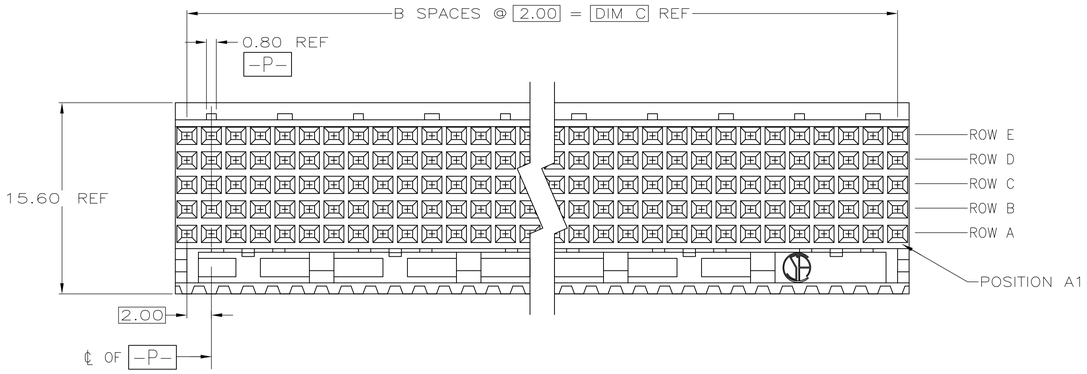

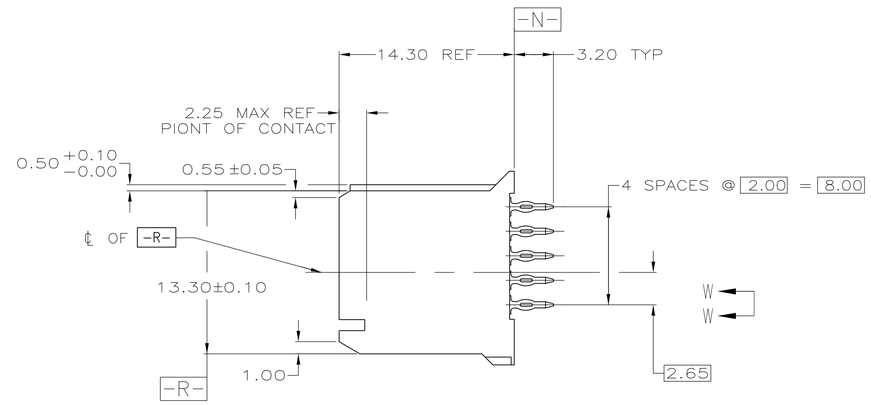

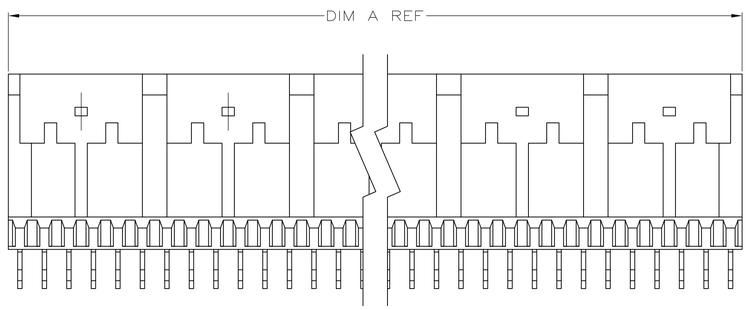

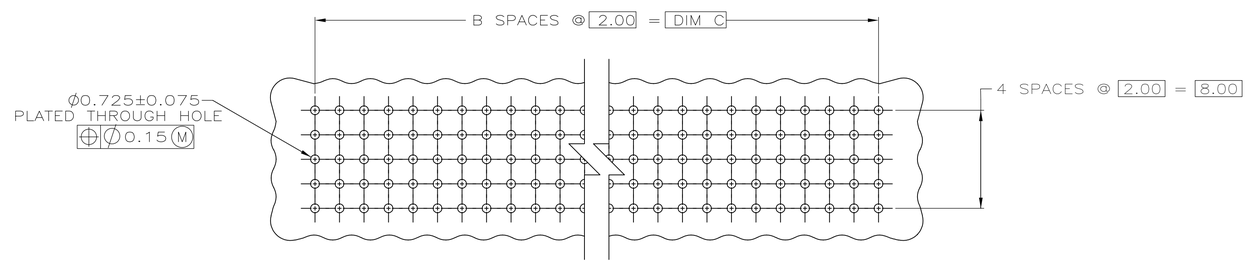

RECOMMENDED CIRCUIT PATTERN
(COMPONENT SIDE)

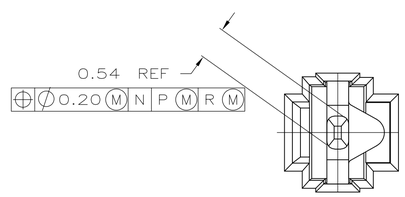

VIEW W-W
SCALE 20:1

	DIM C	B	DIM A	NUMBER OF SIGNAL POSITIONS	PART NUMBER
	94.00	47	95.88	240	223668-8
OBSOLETE	82.00	41	83.88	210	223668-7
OBSOLETE	70.00	35	71.88	180	223668-6
5 OBSOLETE	58.00	29	59.88	150	223668-5
OBSOLETE	46.00	23	47.88	120	223668-4
OBSOLETE	34.00	17	35.88	90	223668-3
	22.00	11	23.88	60	223668-2
	10.00	5	11.88	30	223668-1

THIS DRAWING IS A CONTROLLED DOCUMENT.

DIMENSIONS: mm

TOLERANCES UNLESS OTHERWISE SPECIFIED:
0 PLC ± -
1 PLC ± -
2 PLC ± 0.13
3 PLC ± -
4 PLC ± -
ANGLES ± -

MATERIAL 1 2
FINISH 3

DWN DK SCHRUM 31MAY00
CHK DJ KOVALICK 09JUN00
APVD DJ KOVALICK 09JUN00
PRODUCT SPEC —
APPLICATION SPEC —
WEIGHT —

Tyco Electronics
Tyco Electronics Corporation
Harrisburg, Pa 17105-3608

NAME ASSEMBLY, RECEPTACLE, SIGNAL, VERTICAL, 5 ROW, Z-PACK 2mm FB, WITH PRESS-FIT LEADS
—

SIZE	CAGE CODE	DRAWING NO	RESTRICTED TO
A1	00779	C-223668	—

CUSTOMER DRAWING | SCALE 4:1 | SHEET 1 OF 1 | REV C1