THIS DRAWING IS UNPUBLISHED. RELEASED FOR PUBLICATION –,– .
© COPYRIGHT – By – ALL RIGHTS RESERVED.

LOC	DIST
AF	50

REVISIONS

P	LTR	DESCRIPTION	DATE	DWN	APVD
	R	REVISED PER ECR–13–004343	30JUL13	KH	KR

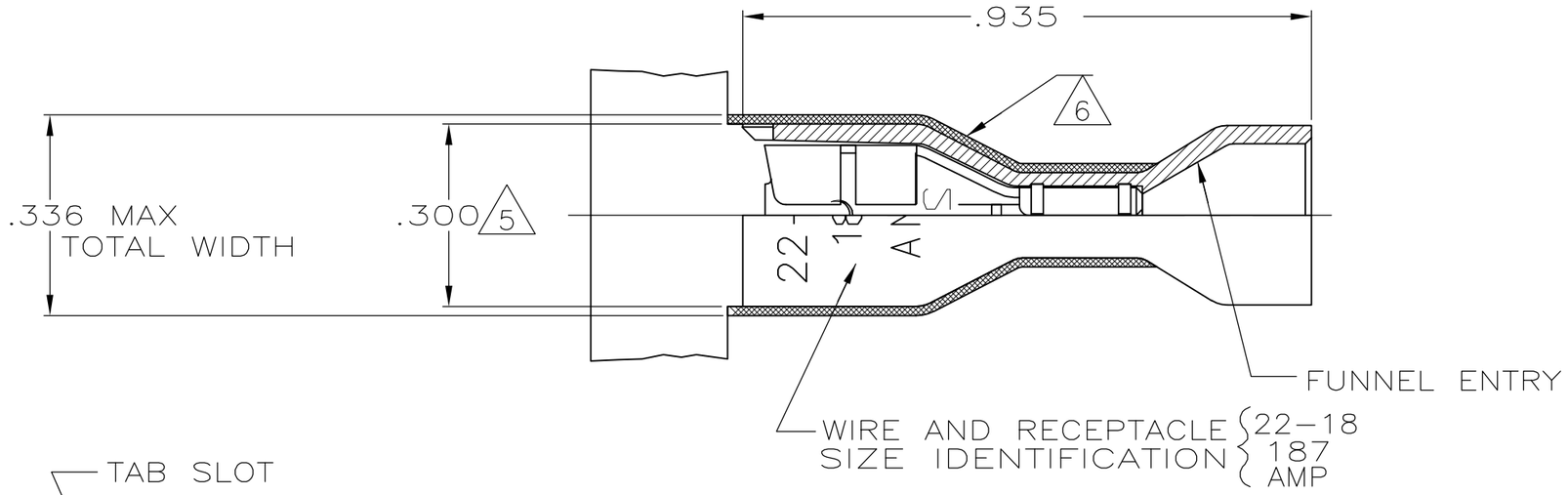

1 MATES WITH .020±.001X.187 TAB

2 WIRE STRIP LENGTH .281

3 INSULATION SIZE .230 MAX DIA

4 CONTINUOUS STRIP ON REELS

5 DIMENSION DOES NOT INCLUDE TRIM BURR

6 .015 MAX CARRIER TRIM BURR PER SIDE IS ALLOWABLE IN THE SHADED AREA

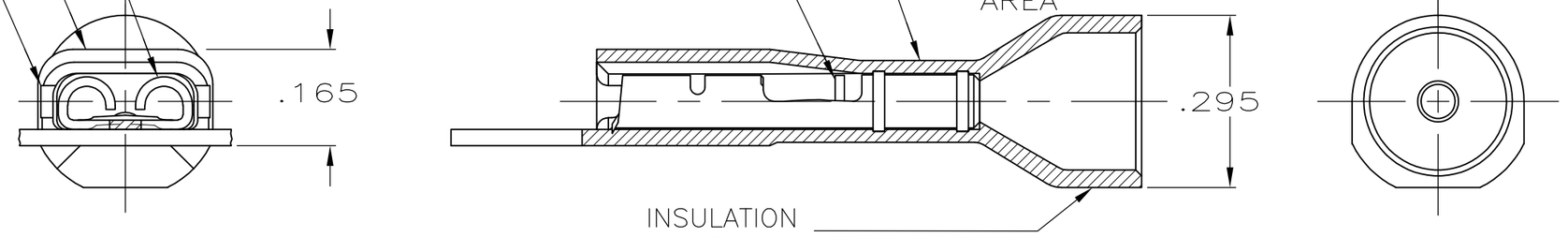

PACKAGING	MATERIAL & FINISH	PART NO.
STANDARD	HOUSING:NYLON,COLOR–BLACK RECEPTACLE:BRASS, TIN	9–520261–2
OBSOLETE BULK	HOUSING:NYLON,COLOR–RED TRANSLUCENT RECEPTACLE:BRASS, TIN	5–520261–2
STANDARD		2–520261–2

THIS DRAWING IS A CONTROLLED DOCUMENT.

DIMENSIONS: INCHES

TOLERANCES UNLESS OTHERWISE SPECIFIED:
0 PLC ± –
1 PLC ± –
2 PLC ± –
3 PLC ± .015
4 PLC ± –
ANGLES ± –

MATERIAL: SEE TABLE

FINISH: SEE TABLE

DWN P FORTNEY 11/4/88
CHK MS FEHER 11/7/88
APVD T SHUTTER 11/7/88
PRODUCT SPEC 108–2043
APPLICATION SPEC 114–2123
WEIGHT –

CUSTOMER DRAWING

TE Connectivity

NAME
RECEPTACLE ASSY,ULTRA–FAST,
.187 SERIES, 22–18 AWG

SIZE	CAGE CODE	DRAWING NO	RESTRICTED TO
A3	00779	C–520261	–

SCALE	SHEET	REV
4:1	1 OF 1	R