THIS DRAWING IS UNPUBLISHED. RELEASED FOR PUBLICATION –,– .
© COPYRIGHT – By – ALL RIGHTS RESERVED.

LOC	DIST
G	14

REVISIONS

P	LTR	DESCRIPTION	DATE	DWN	APVD
	R1	REV PER ECO-12-014455	13SEP12	KH	DR

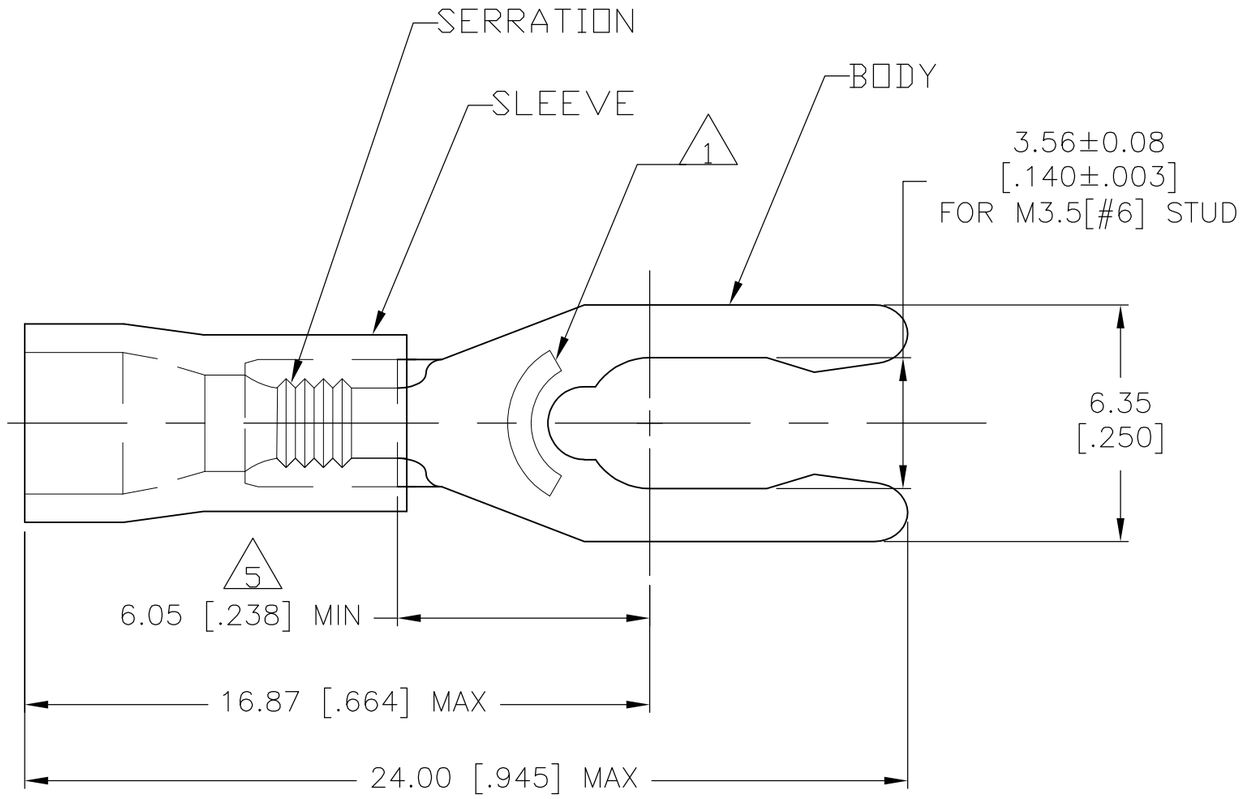

AMP WIRE RANGE	Listed FILE E13288	LR7189 Certified
22–16 AWG SOLID OR STRANDED	22–16 AWG SOLID OR STRANDED	22–16 AWG SOLID OR STRANDED

1 STAMP "AMP 22–18*" APPROX AS SHOWN 22–16 TERMINALS ARE STAMPED 22–18 IN ACCORDANCE WITH MILITARY SPEC SAE AS7928 COMMERCIAL WIRE RANGE IS 22–16

2 WIRE INSUL DIA, 2.67–3.56 [.105–.140]

3 TONGUE MATL THK, 0.79±0.05 [.031±.002]

4 MATERIAL: BODY – BRASS. PER ASTM B36
SLEEVE – PVC, COLOR – RED

5 APPLIES FROM THE EDGE OF METAL BARREL TO THE CENTER OF THE STUD.

QTY	PACKAGE TYPE	PART NO
100	LOOSE PIECE,BOX	8–52453–1
5000	ON TAPE, REEL	52453–1
1000	LOOSE PIECE	52453

CUSTOMER SERVICE SYSTEMS

FOR ADDITIONAL PRODUCT INFORMATION OR COPIES OF DRAWINGS AND TECHNICAL DOCUMENTS	PRODUCT INFORMATION CENTER 1–800–522–6752
FOR APPLICATION TOOLING INFORMATION	TOOLING ASSISTANCE CENTER 1–800–722–1111
FOR ORDER ENTRY	1–800–526–5142

THIS DRAWING IS A CONTROLLED DOCUMENT FOR AMP INCORPORATED. IT IS SUBJECT TO CHANGE AND THE CONTROLLING ENGINEERING ORGANIZATION SHOULD BE CONTACTED FOR THE LATEST REVISION.

MAX RECOMMENDED OPERATING TEMPERATURE: 105°C [221°F]

VOLTAGE RATING: 600V MAX (1000V FIXTURE OR SIGN)

CIRCULAR MIL AREA: 0.26–1.65mm² [509–3260] SOLID OR STRANDED

THIS DRAWING IS A CONTROLLED DOCUMENT.

DIMENSIONS: mm [INCHES]

TOLERANCES UNLESS OTHERWISE SPECIFIED:

0 PLC	± –
1 PLC	± –
2 PLC	± 0.20 [.008]
3 PLC	± –
4 PLC	± –
ANGLES	± –

MATERIAL 4

FINISH: TIN PER ASTM B545

DWN	L OLMEDA	26JUN95
CHK	M ELLIS	26JUN95
APVD	G NGO	26JUN95

PRODUCT SPEC: UL 486A–B

APPLICATION SPEC: —

WEIGHT: —

TE Connectivity

NAME: TERMINAL, SPRING SPADE, LONG, PLASTI–GRIP, WIRE SIZE: 22–16 AWG

SIZE	CAGE CODE	DRAWING NO	RESTRICTED TO
A3	00779	C–52453	—

CUSTOMER DRAWING

SCALE	SHEET	REV
6:1	1 OF 1	R1