DRAWING MADE IN THIRD ANGLE PROJECTION

THIS DRAWING IS UNPUBLISHED. RELEASED FOR PUBLICATION ,19 .

© COPYRIGHT 19 BY AMP INCORPORATED. ALL INTERNATIONAL RIGHTS RESERVED.

MOD	LOC	DIST	P	F
8	BD	39	✓	✓

REVISIONS

ZONE	LTR	DESCRIPTION	DATE	APPD
	A	REDRAWN ON CAD	4-16-80	–

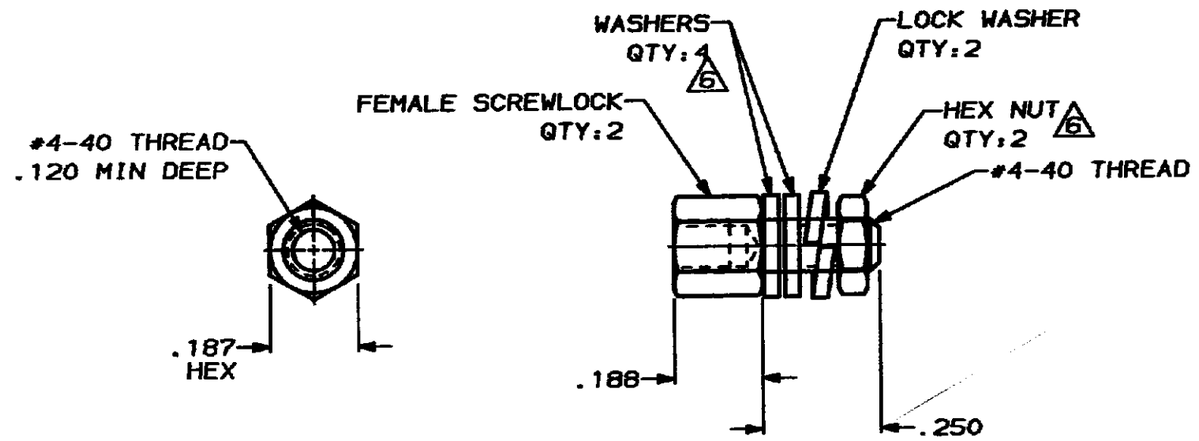

OBSOLETE	PACKAGING	FINISH	PART NUMBER
	5 6	2	745563-5
	5	2	745563-4
	4	2	745563-3
	5	1	745563-2
	4	1	745563-1

1. ZINC PLATED PER ASTM B633, TYPE II, CLASS SCI, YELLOW CHROMATE.
2. ZINC PLATED PER ASTM B633, TYPE III, CLASS SCI, CLEAR CHROMATE.
3. PARTS PACKAGED UNASSEMBLED.
4. PARTS PACKAGED AS A UNIT KIT.
5. PARTS INDIVIDUALLY BULK PACKED & SHIPPED AS A UNIT PACKAGE.
6. WASHERS & HEX NUTS ARE NOT INCLUDED.

DO NOT SCALE PRINT. UNLESS SPECIFIED DIMENSIONS IN INCHES TOLERANCES ON: 2 PLC DEC ± – 3 PLC DEC ± .005 ANGLES ± –

MATERIAL: STEEL PER PER A108

FINISH: SEE TABLE

DR 4-16-80 J GALLUCCI 80
CHK 4-16-80
APPD 7-16-80
APPD 7-16-80
PRODUCT SPEC
APPLICATION SPEC –
WEIGHT –

AMP INCORPORATED
Harrisburg, Pa. 17105

NAME: KIT, SCREWLOCK, FEMALE, PLASTIC OR METAL SERIES, SHORT, AMPLIMITE™ HDE

SIZE	FSCM NO	DRAWING NO
B	00779	745563

SCALE 4:1 SHEET 1 OF 1

CUSTOMER DRAWING

AMP 1470-15 REV 3-80